ORTA SEHPA

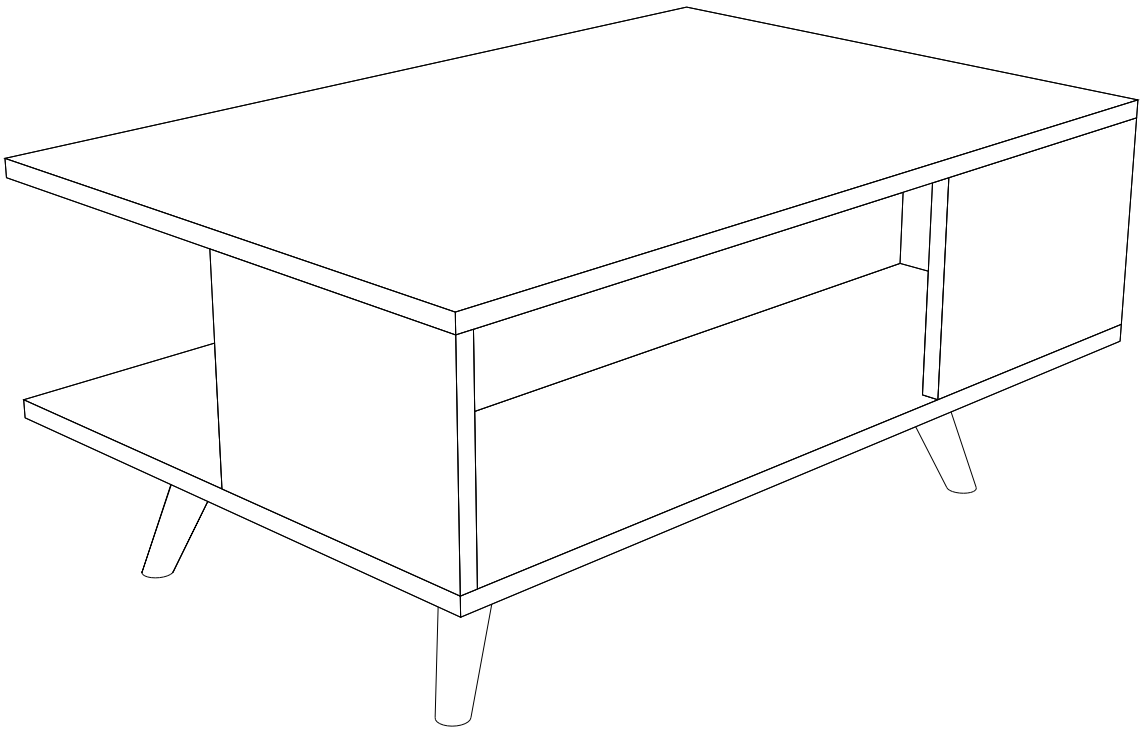

ASSEMBLY MANUAL | ORTA SEHPA

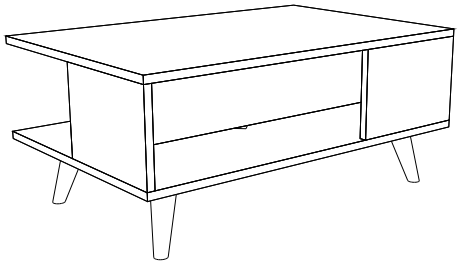

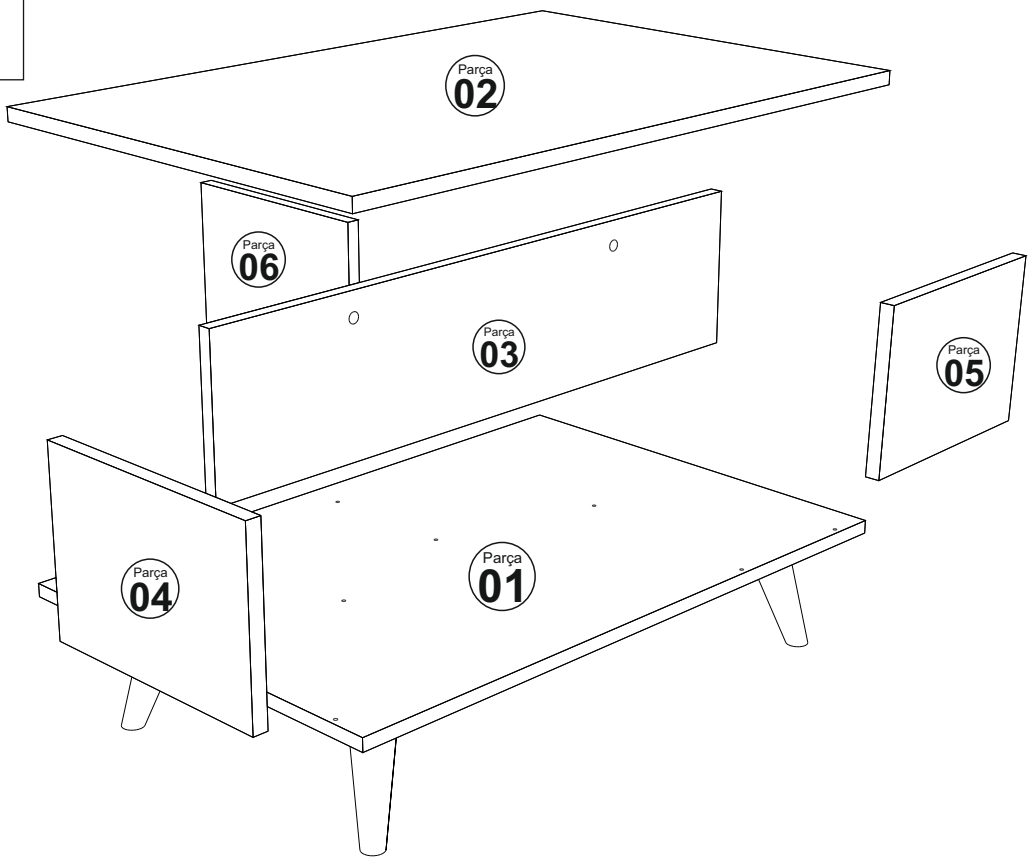

ACCESSORY LIST

Minifix	Minifix Screw	Dowel	Minifix Tapa Mermer	Minifix Tapa Atlatik	4*50 Screw	3,5*18 Screw	Retro Ayak
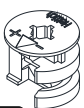	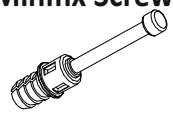		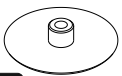	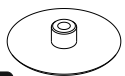			
A01 8x	A02 8x	A03 8x	A17 6x	A17 2x	A45 8x	A10 16x	A07 4x

Dear Customer,

The product you bought was subjected to all sorts of test and control before sending out to you. Even in this situation, sometimes happen that some component is damaged durin the transportation. In such please do not sent the whole article back us. Just request/order the damaged part. While requesting the required part, describe it exactly by looking to service card. Missing part will be sent you as soon as possible. Before start assembling, please check the whole components and accessories according to the lists. After being sure that every part and accessory are okay and right, start assembling. Before start assembling, please clean all the components with a damp cloth. If you bought more than one product, to prevent confusion be sure that you completed the first product. Then start the other product's assembling.

Never drag the products. While carrying, disassociate and lift the product and carry with minimum 2 people. For long distances carry the product with the package.

It is very easy to clean the surfaces of your product. It is enough to wipe a damp and soapy cloth or other household cleaners.

Do not directly contact your furniture with excessive heat, cold and humidity because the product can be affected.

Do not use your furniture out of purposes.

ASSEMBLY MANUAL | ORTA SEHPA

1. Step

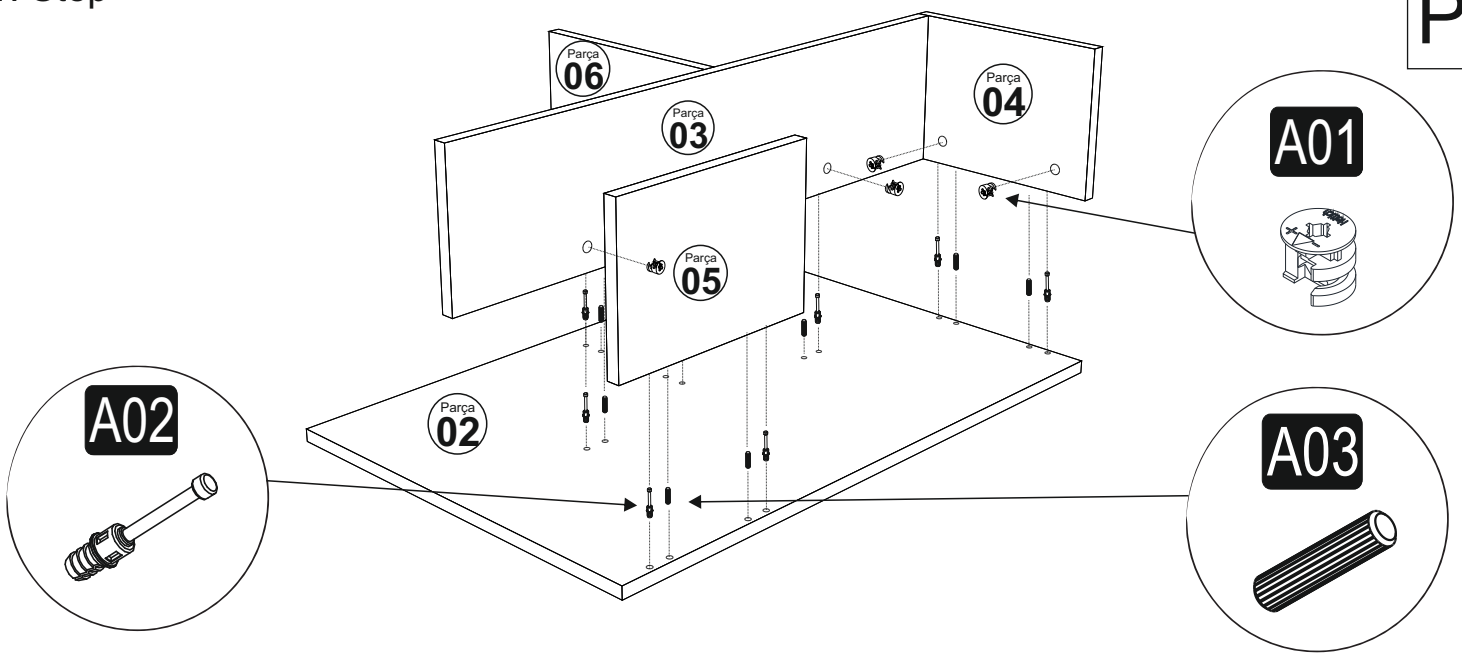

2. Step

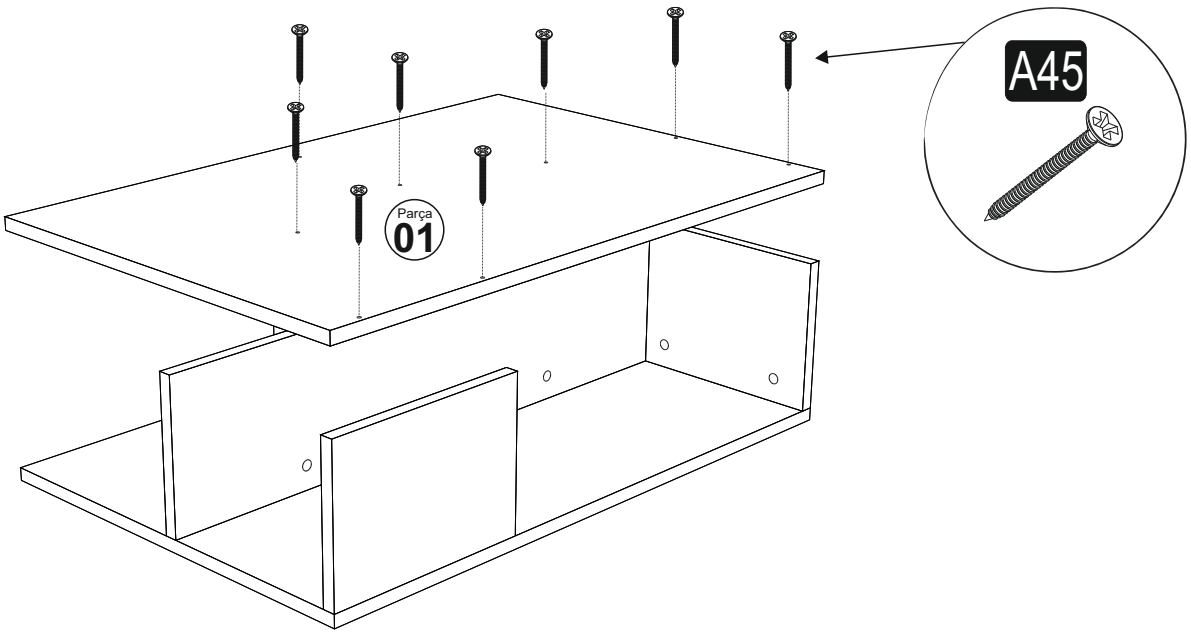

3. Step

