LUMO BOOK SHELF

ASSEMBLY INSTRUCTIONS

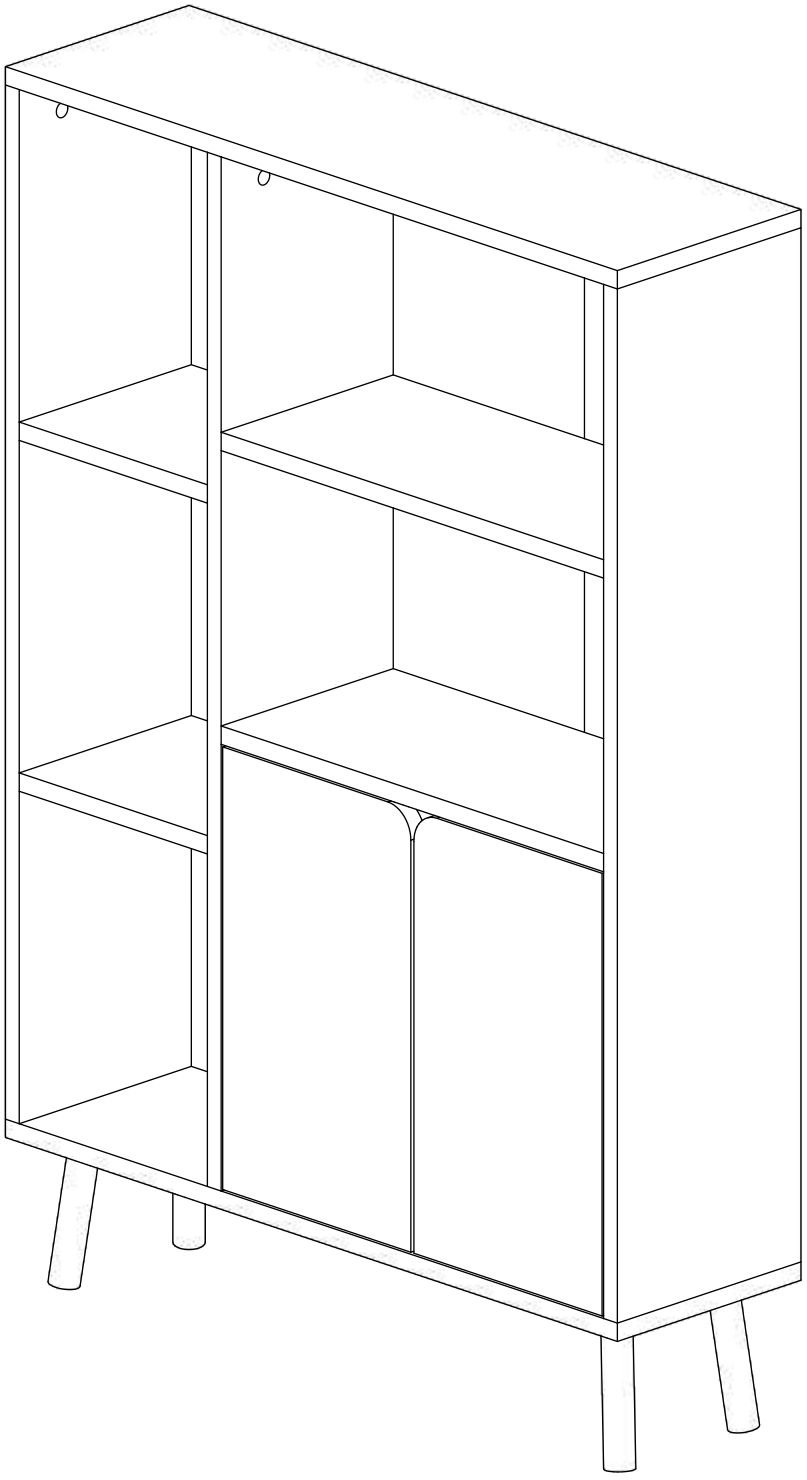

TOOLS & INSTALLATION COMPONENTS

A	B	C	D	E
SCREW	HEAD	DOWEL	4*50 SCREW	3,5*18 SCREW
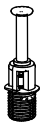 22 PCS	 22 PCS	 6 PCS	 6 PCS	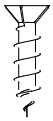 35 PCS

F	G	H	I	J
HINGE	4*25 SCREW	LEG CONNECTOR	BACK CONNECTOR	WOOD LEG
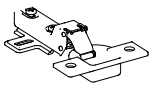 4 PCS	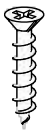 12 PCS	 4 PCS	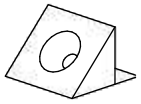 18 PCS	 4 PCS

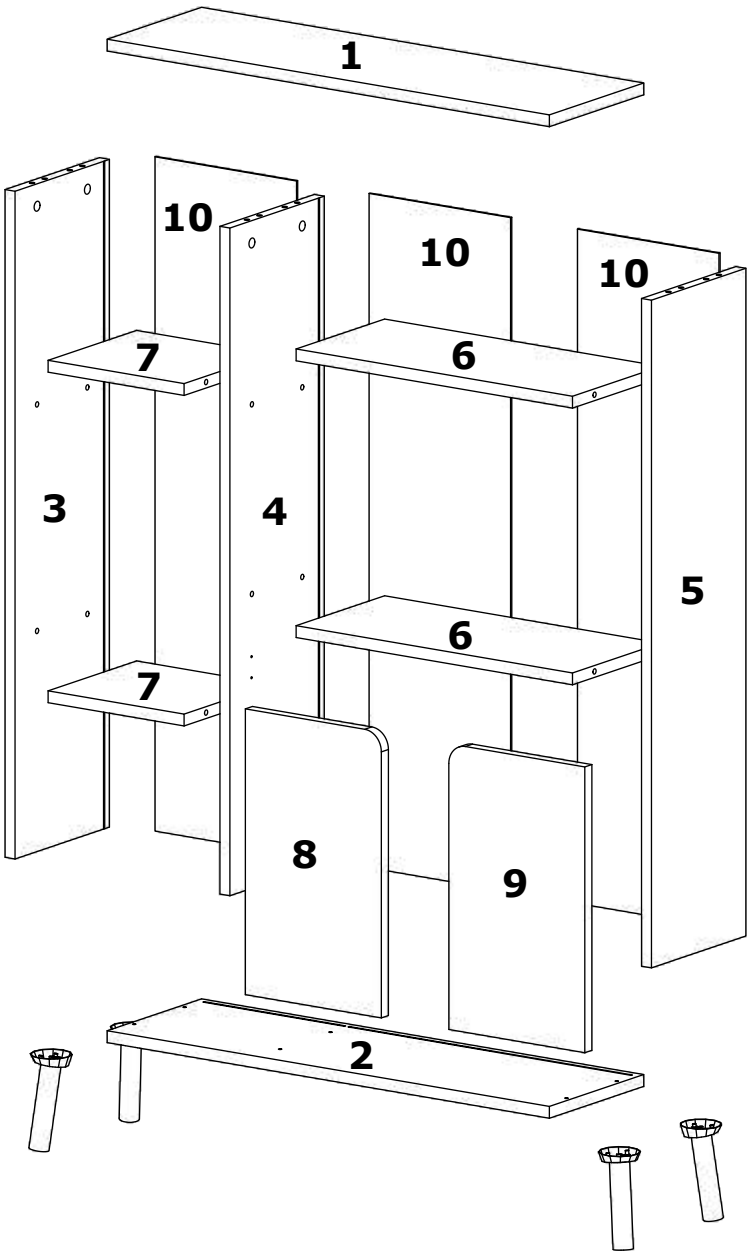

STEP 1

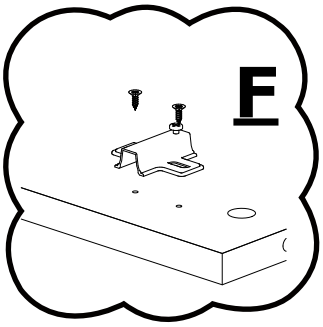

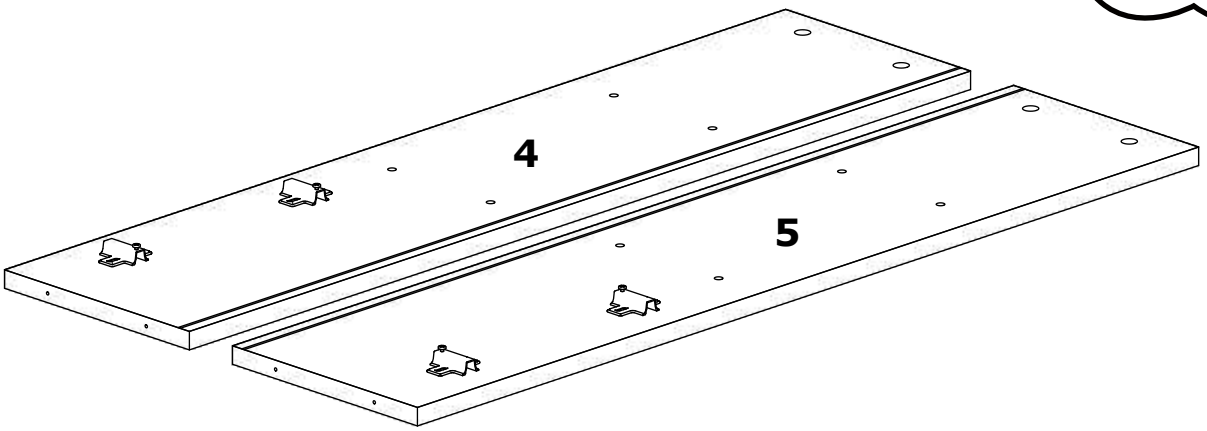

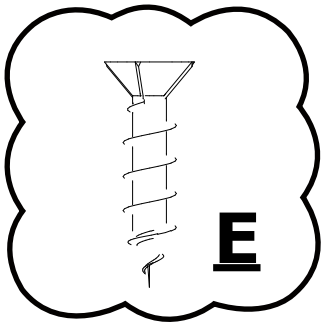

STEP 2

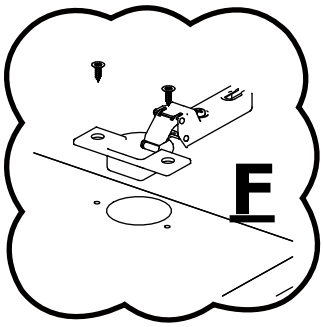

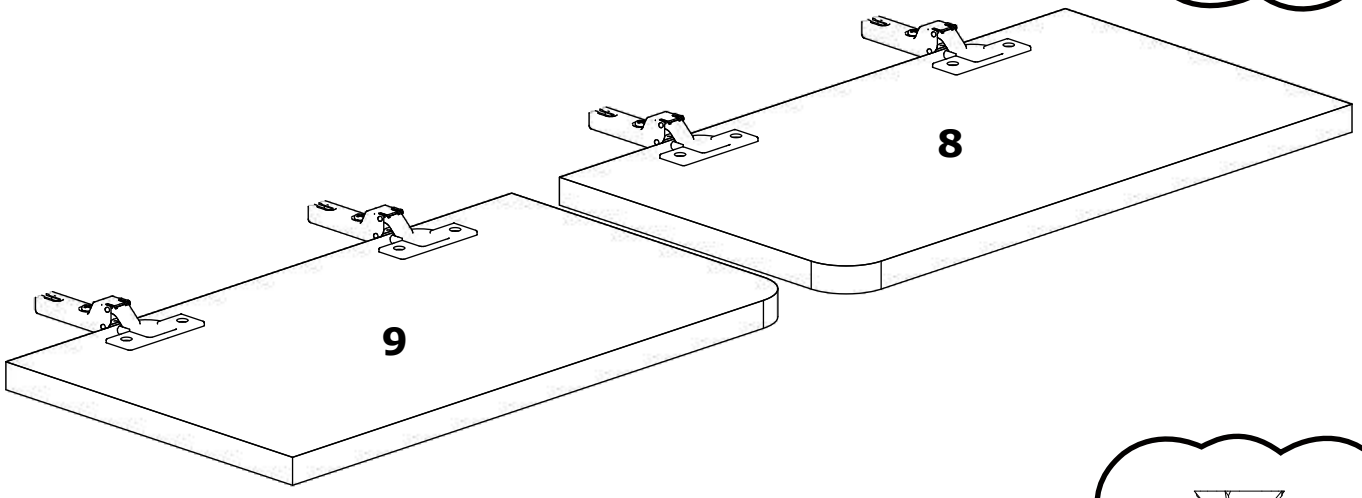

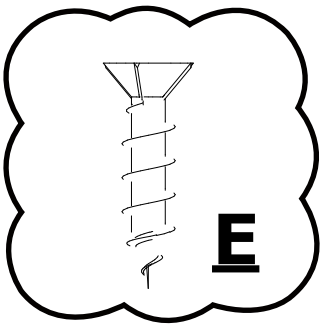

STEP 3

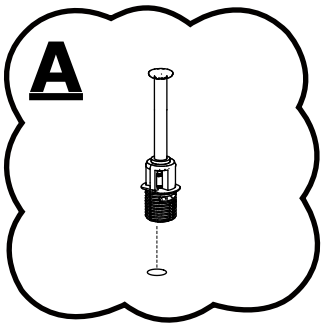

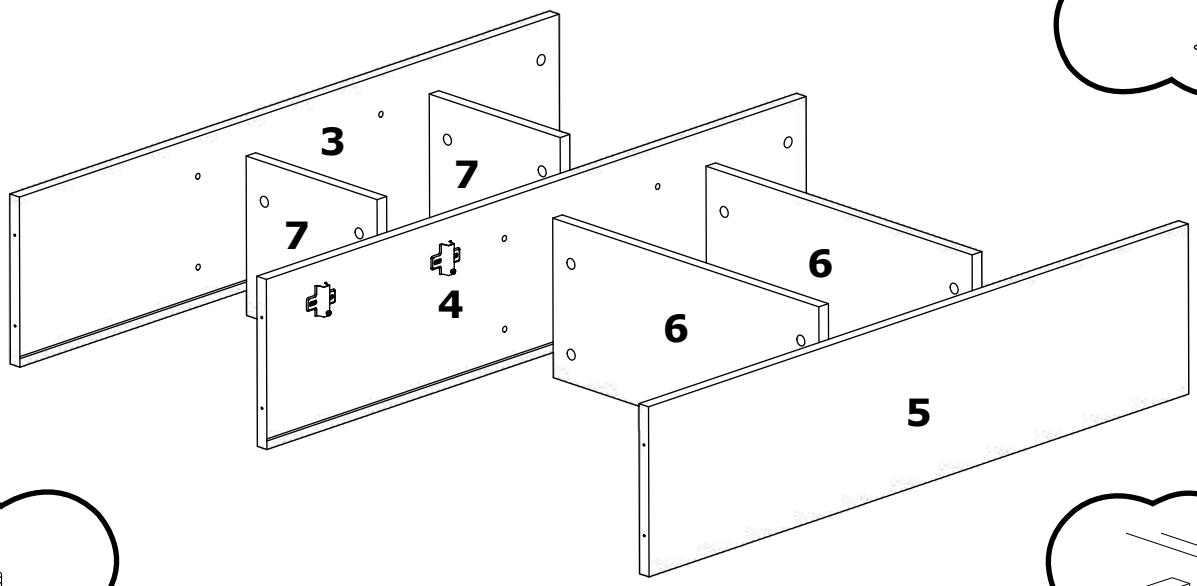

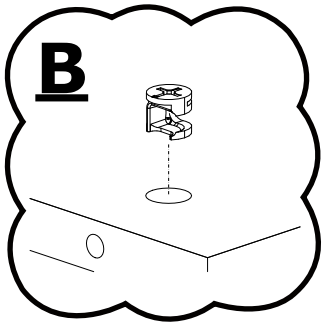

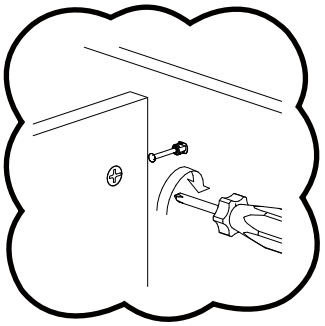

STEP 4

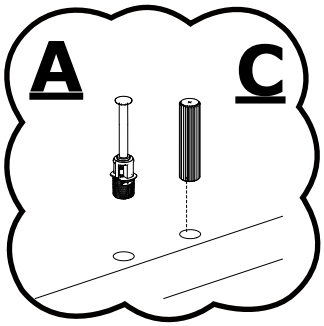

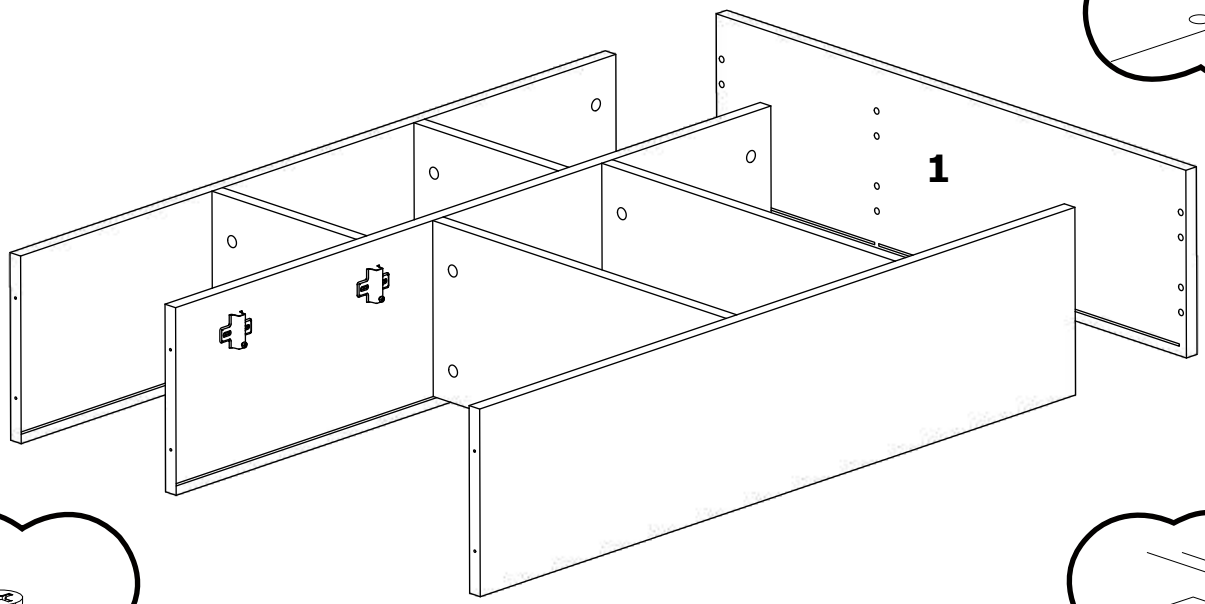

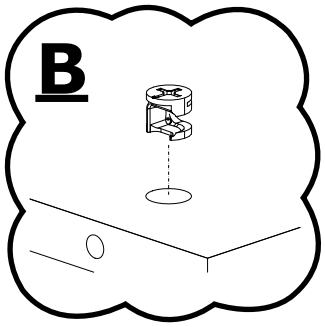

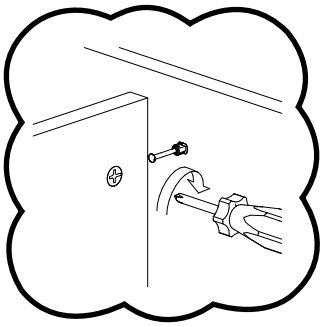

STEP 5

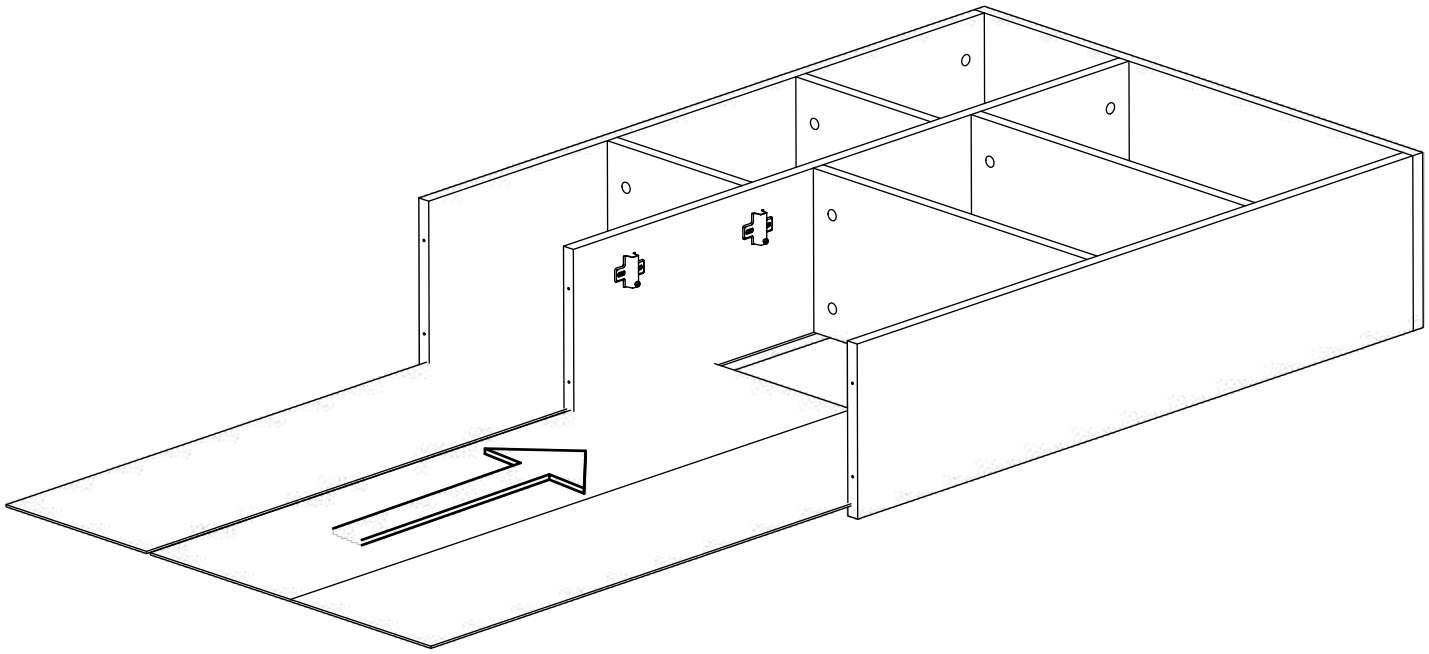

STEP 6

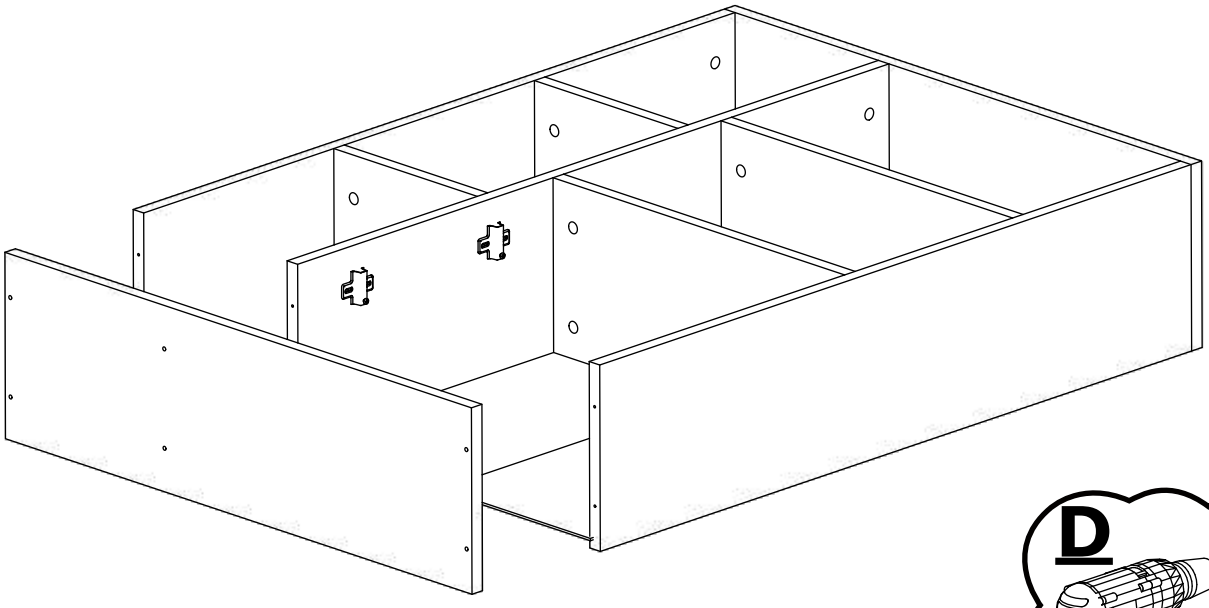

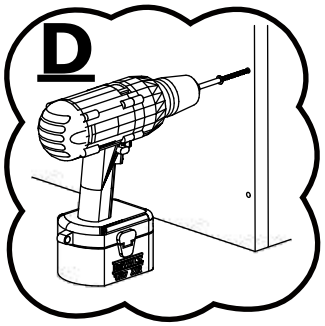

STEP 7

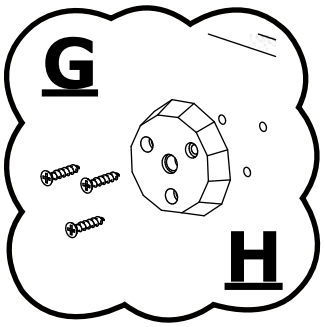

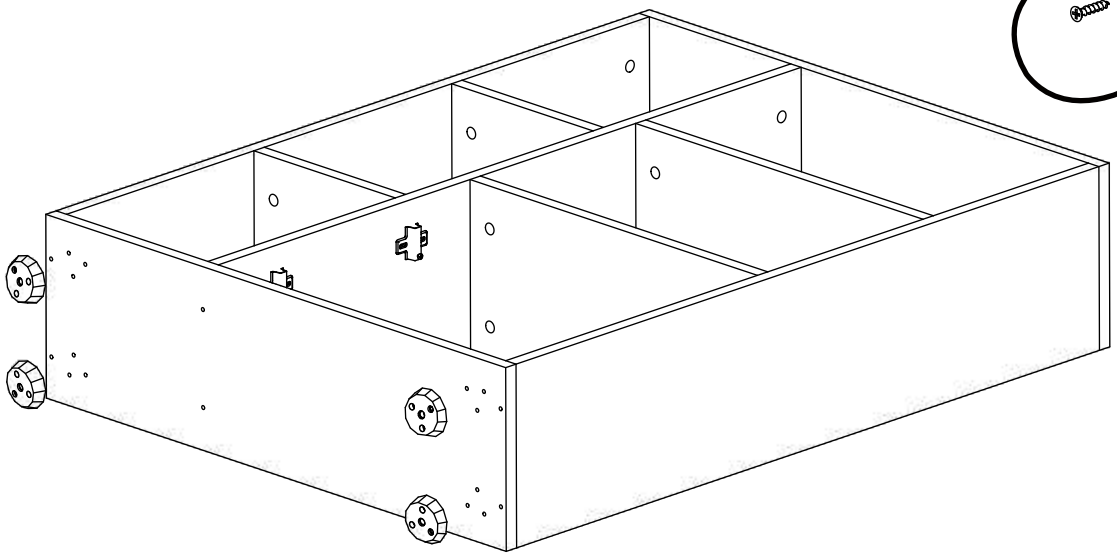

STEP 8

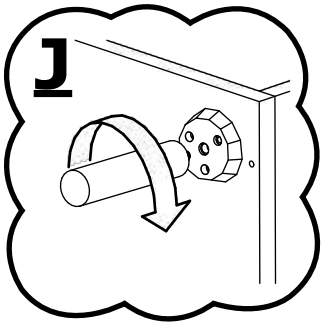

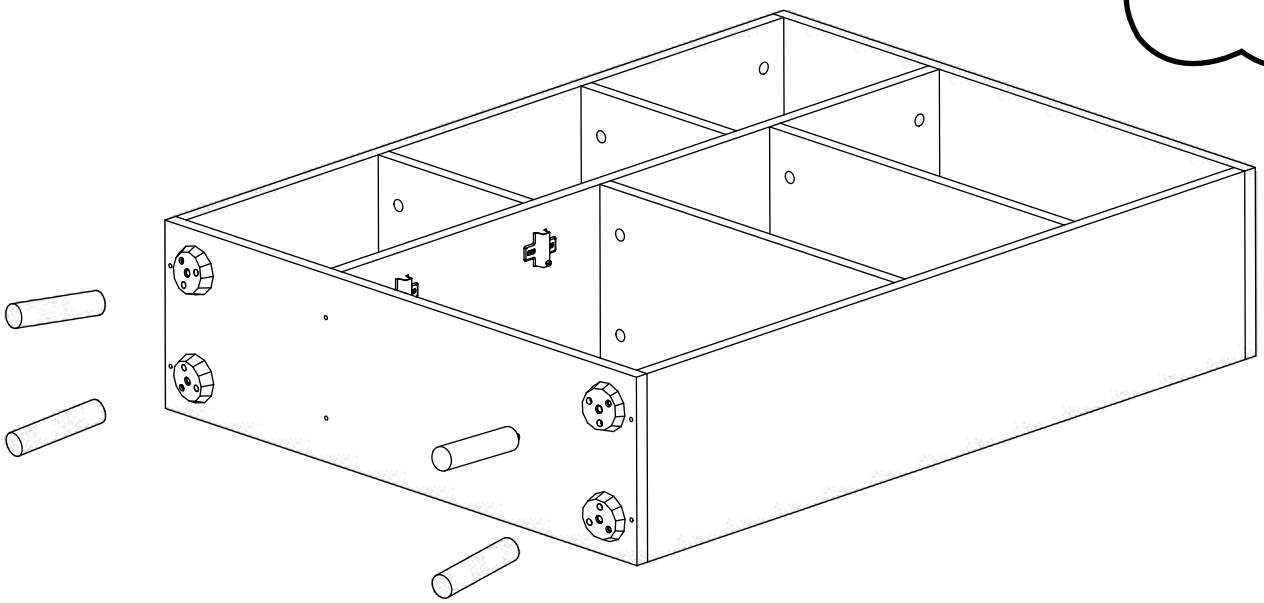

STEP 9

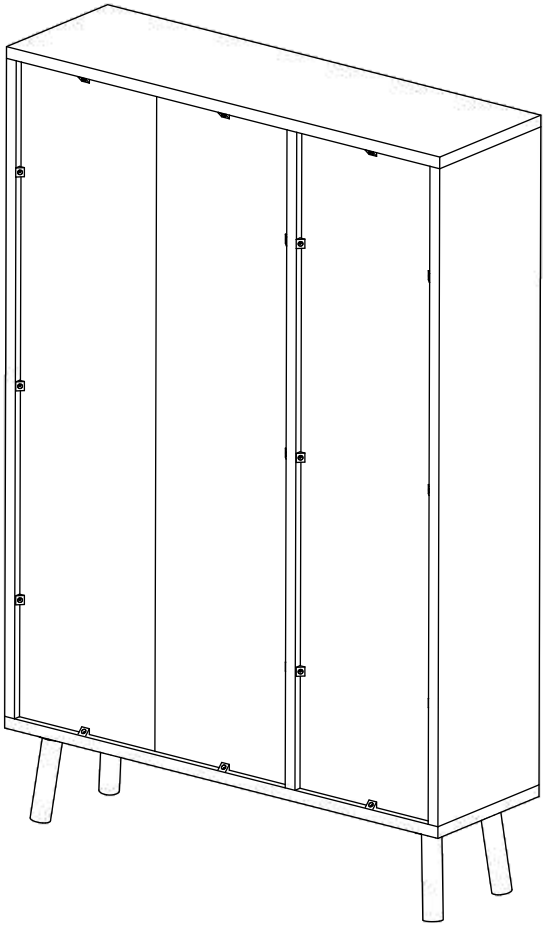

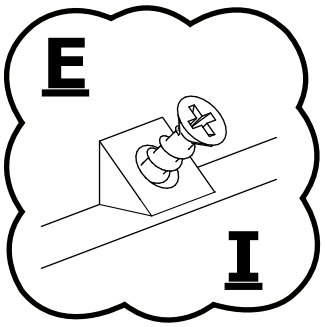

STEP 10

