MINOLA BOOK SHELF

ASSEMBLY INSTRUCTIONS

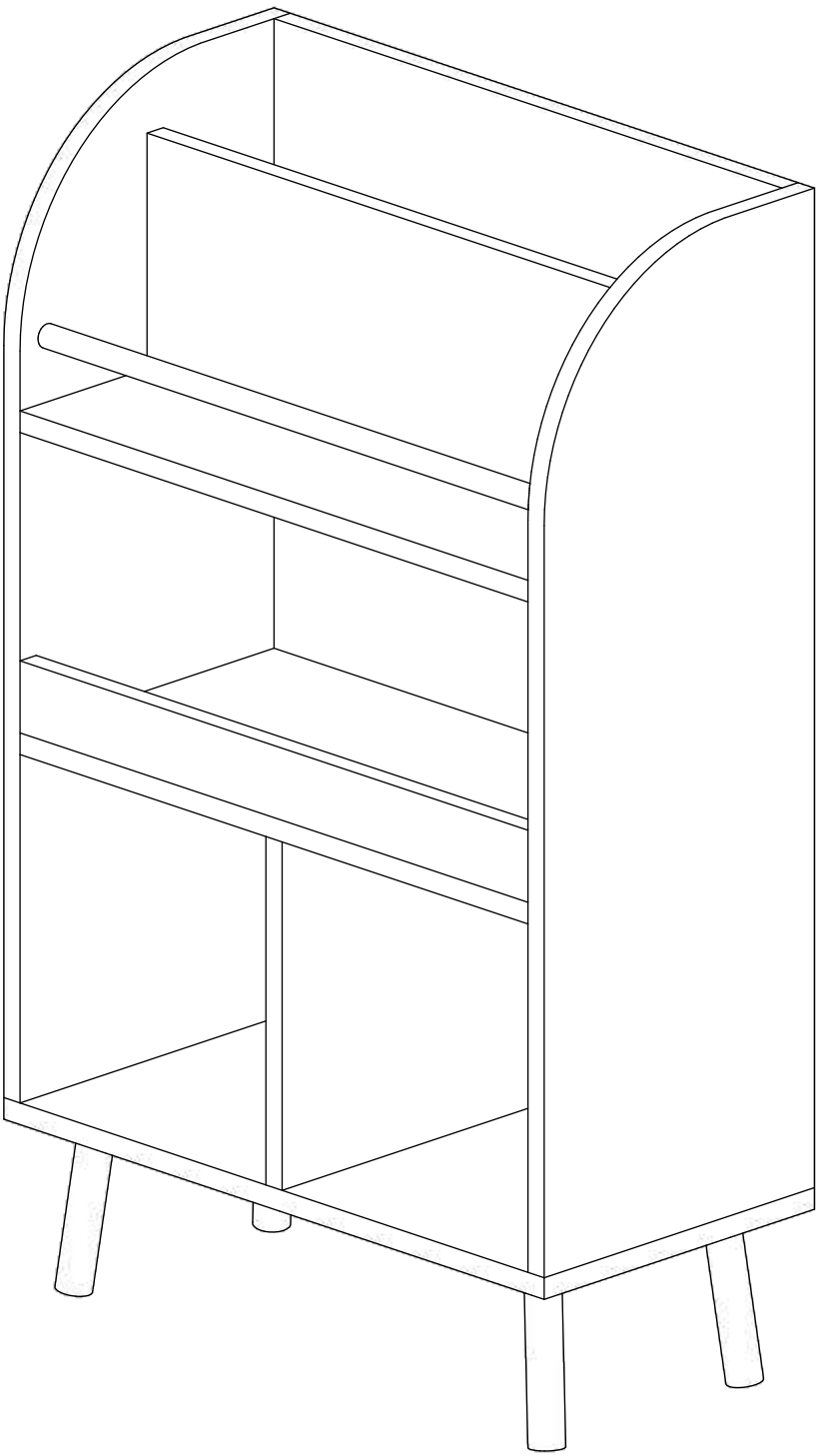

TOOLS & INSTALLATION COMPONENTS

A **SCREW** 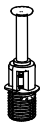 22 PCS	**B** **HEAD**  28 PCS	**C** **DOWEL**  30 PCS	**D** **4*50 SCREW**  8 PCS	**E** **DOUBLE SCREW** 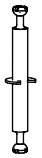 2 PCS
	G **4*25 SCREW** 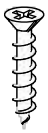 12 PCS	**H** **LEG CONNECTOR**  4 PCS		**J** **WOOD LEG**  4 PCS

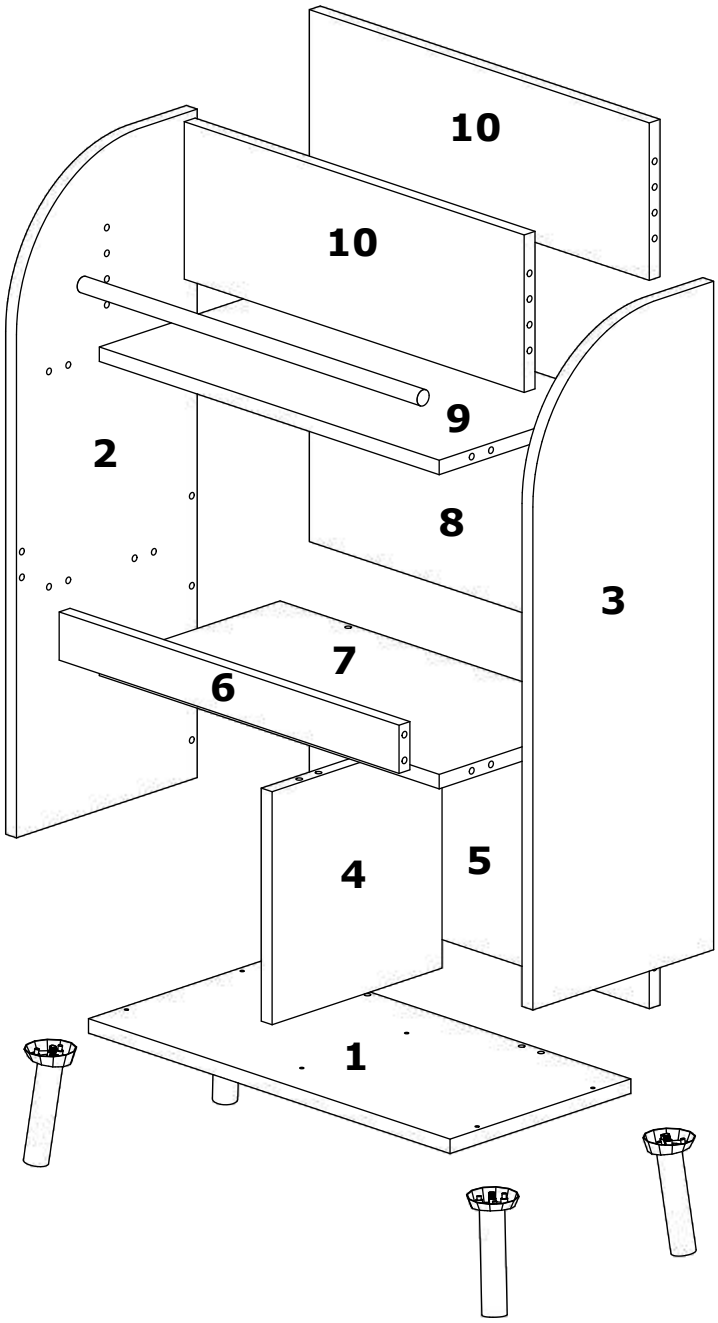

STEP 1

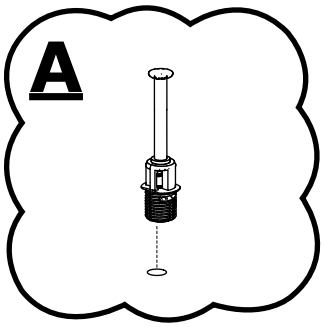

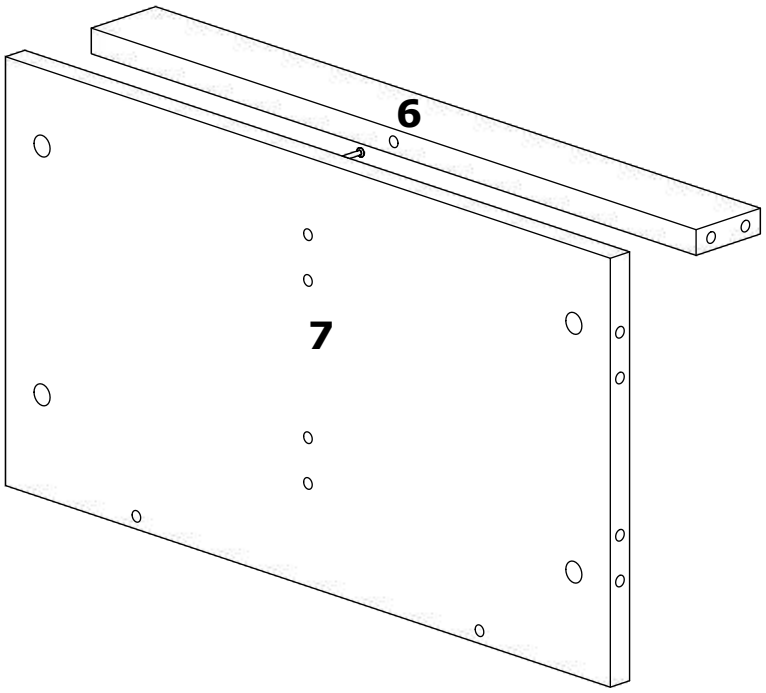

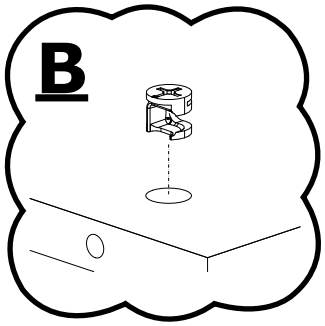

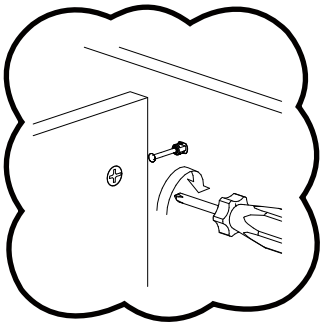

STEP 2

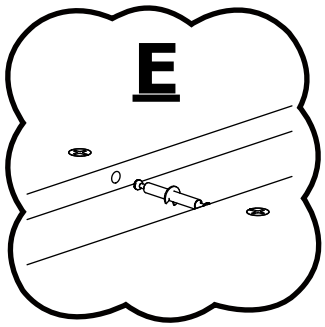

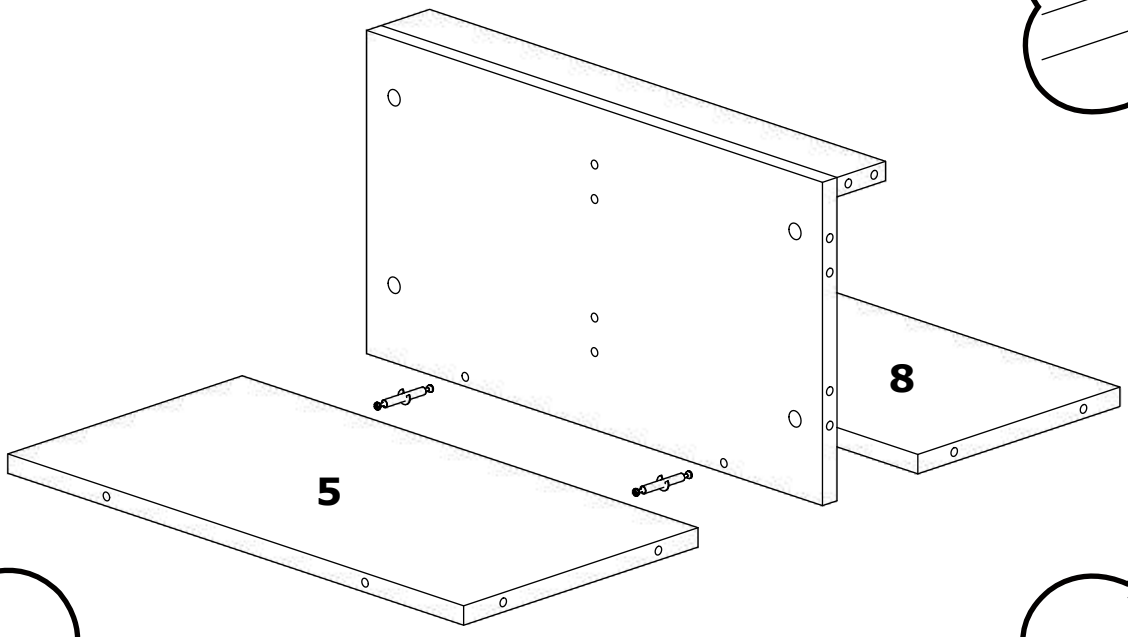

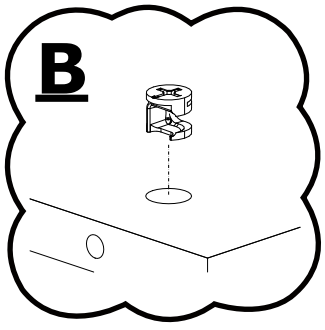

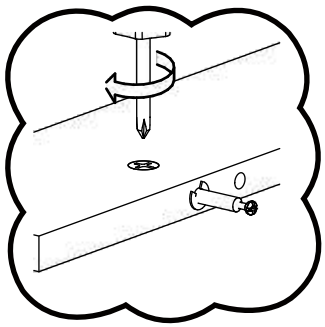

STEP 3

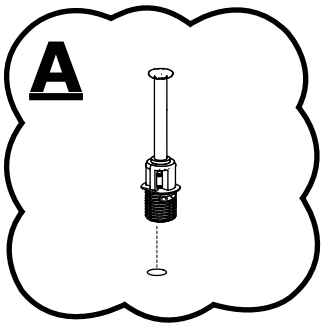

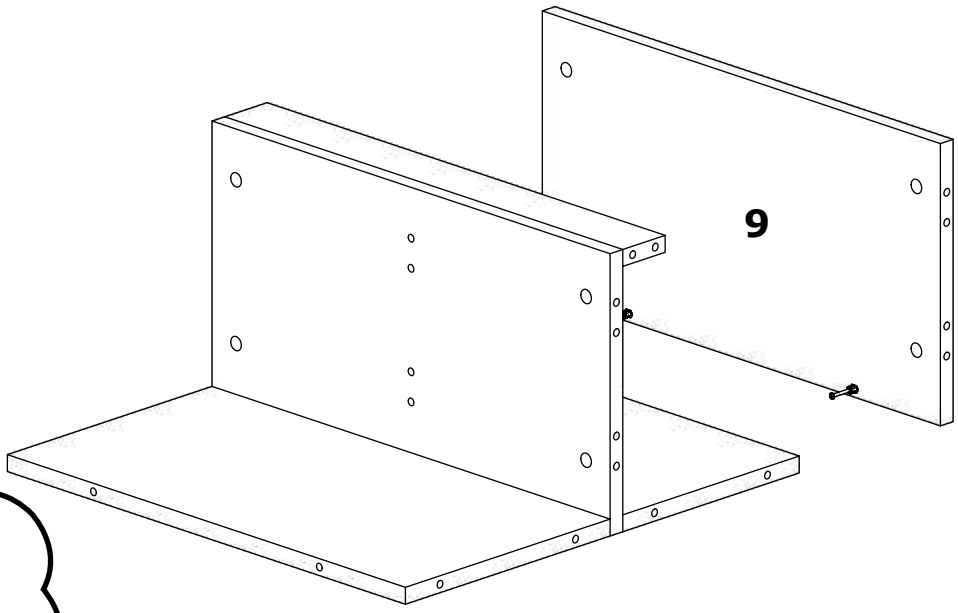

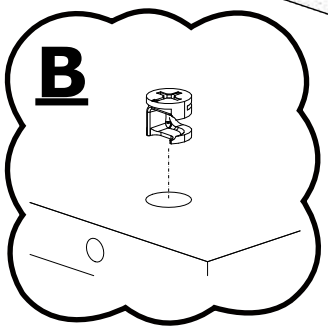

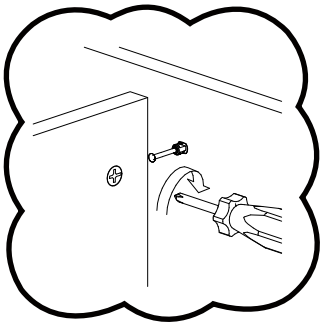

STEP 4

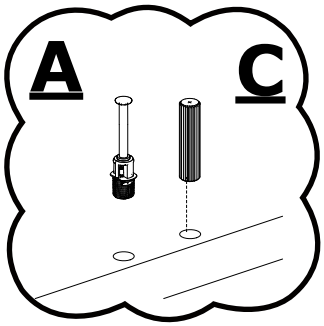

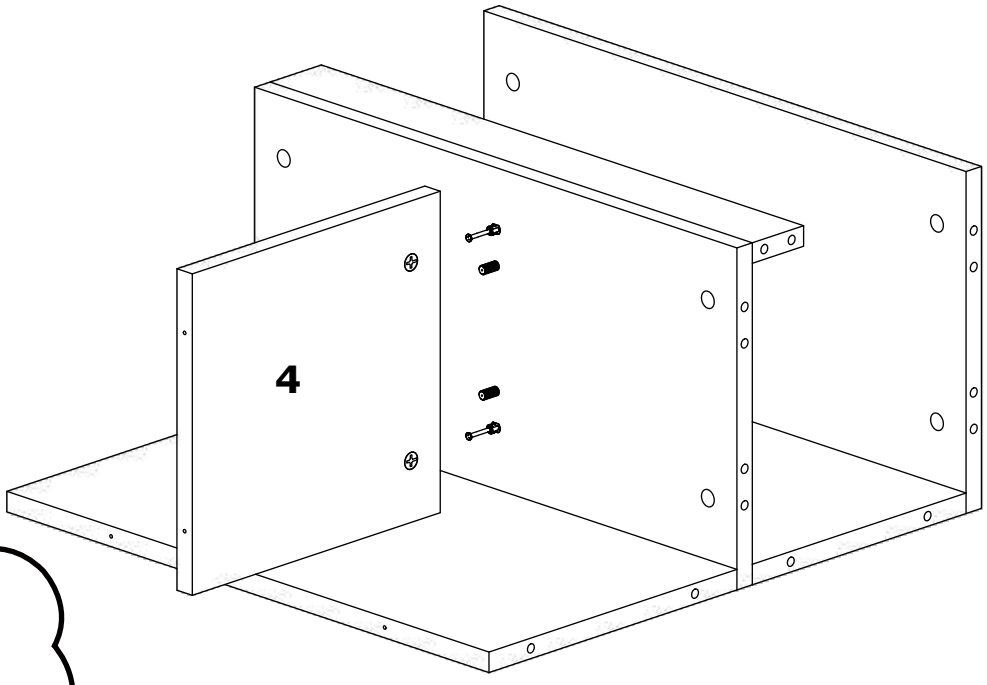

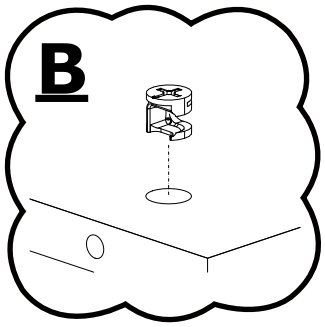

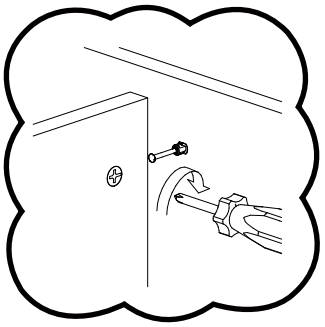

STEP 5

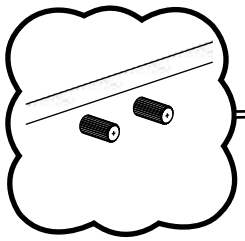

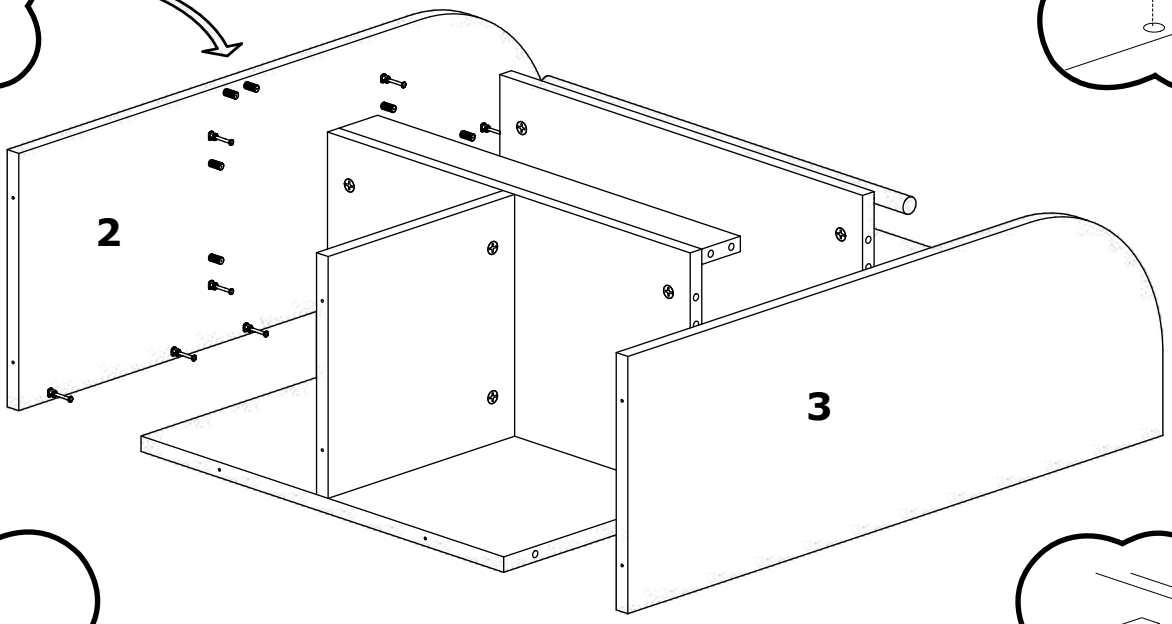

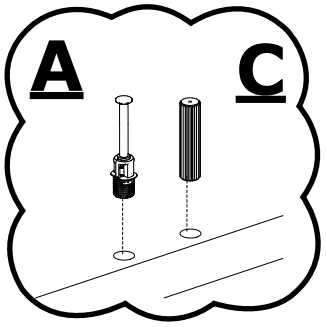

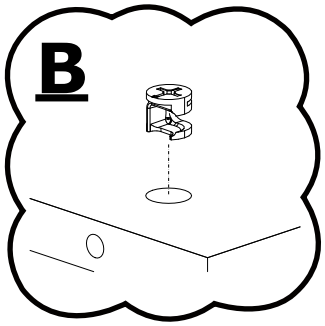

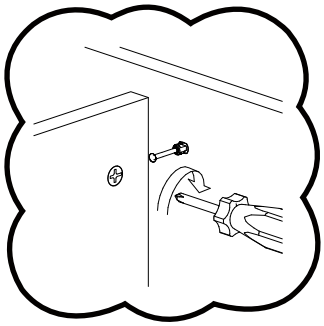

STEP 6

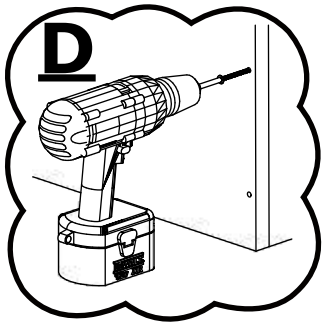

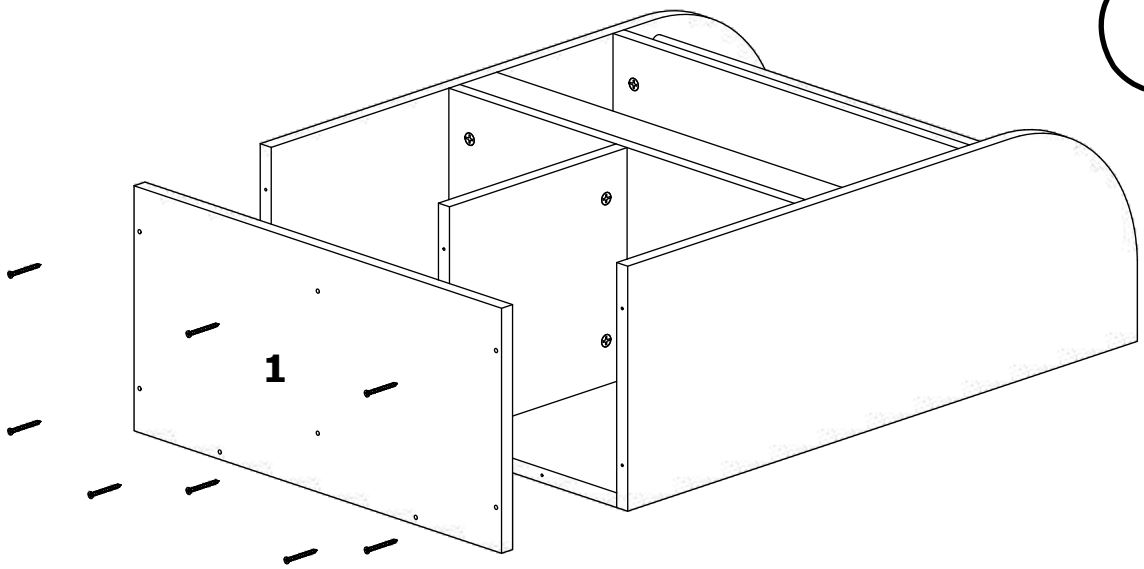

STEP 7

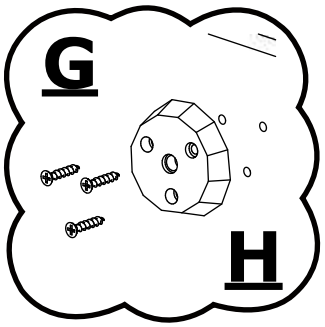

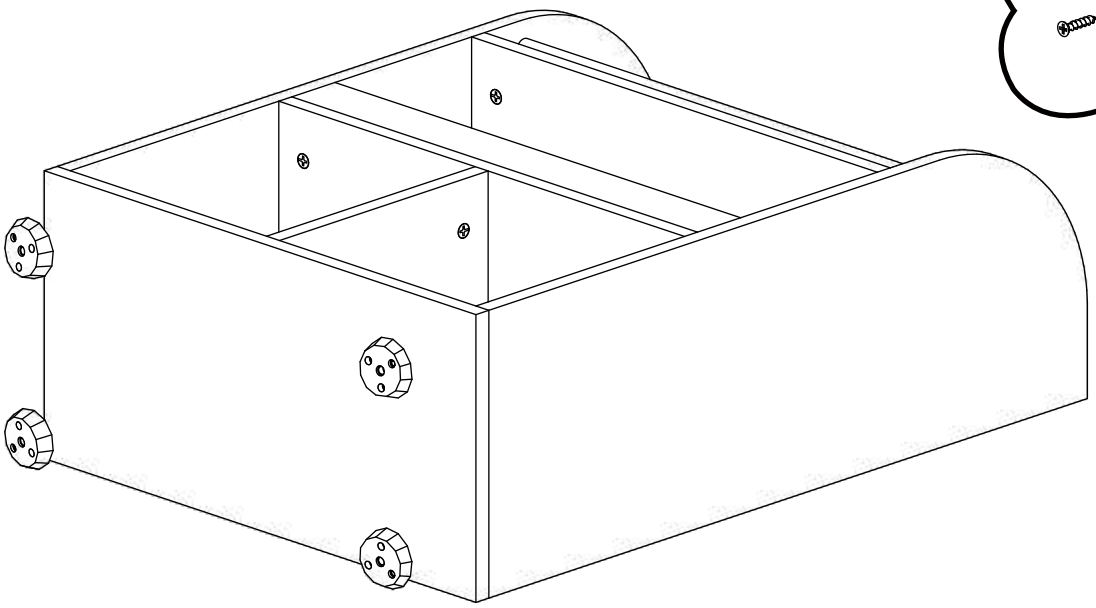

STEP 8

