

6X 4X

1

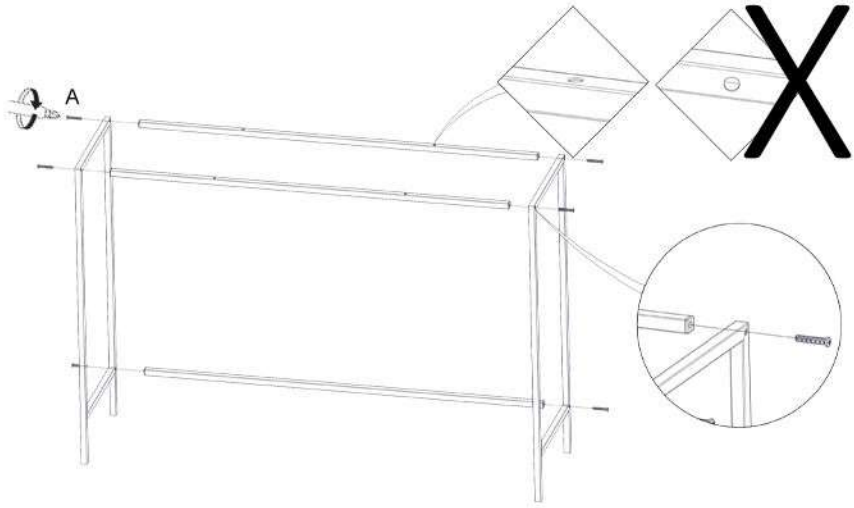

2

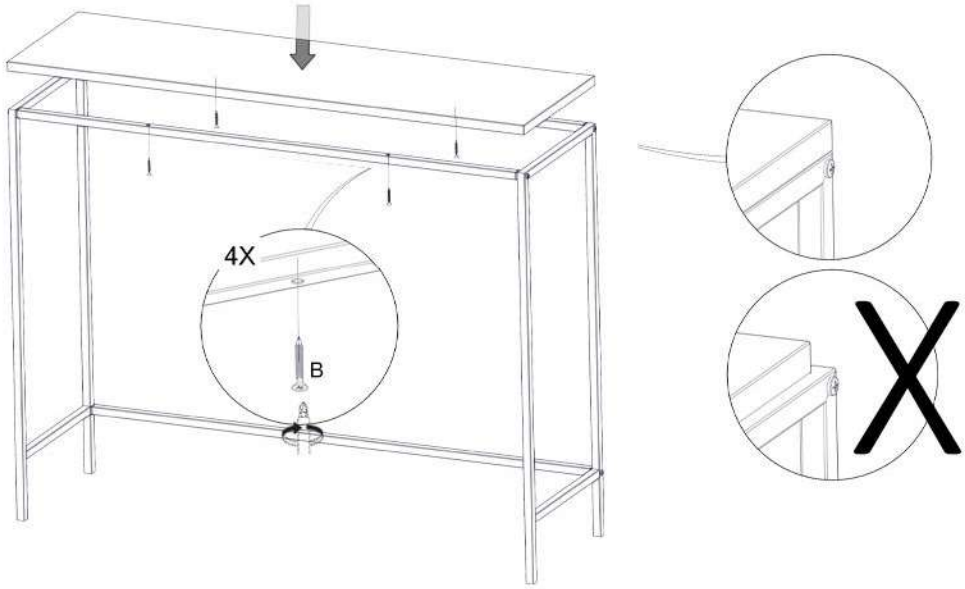

3

