INSTALLATION AND USER MANUAL

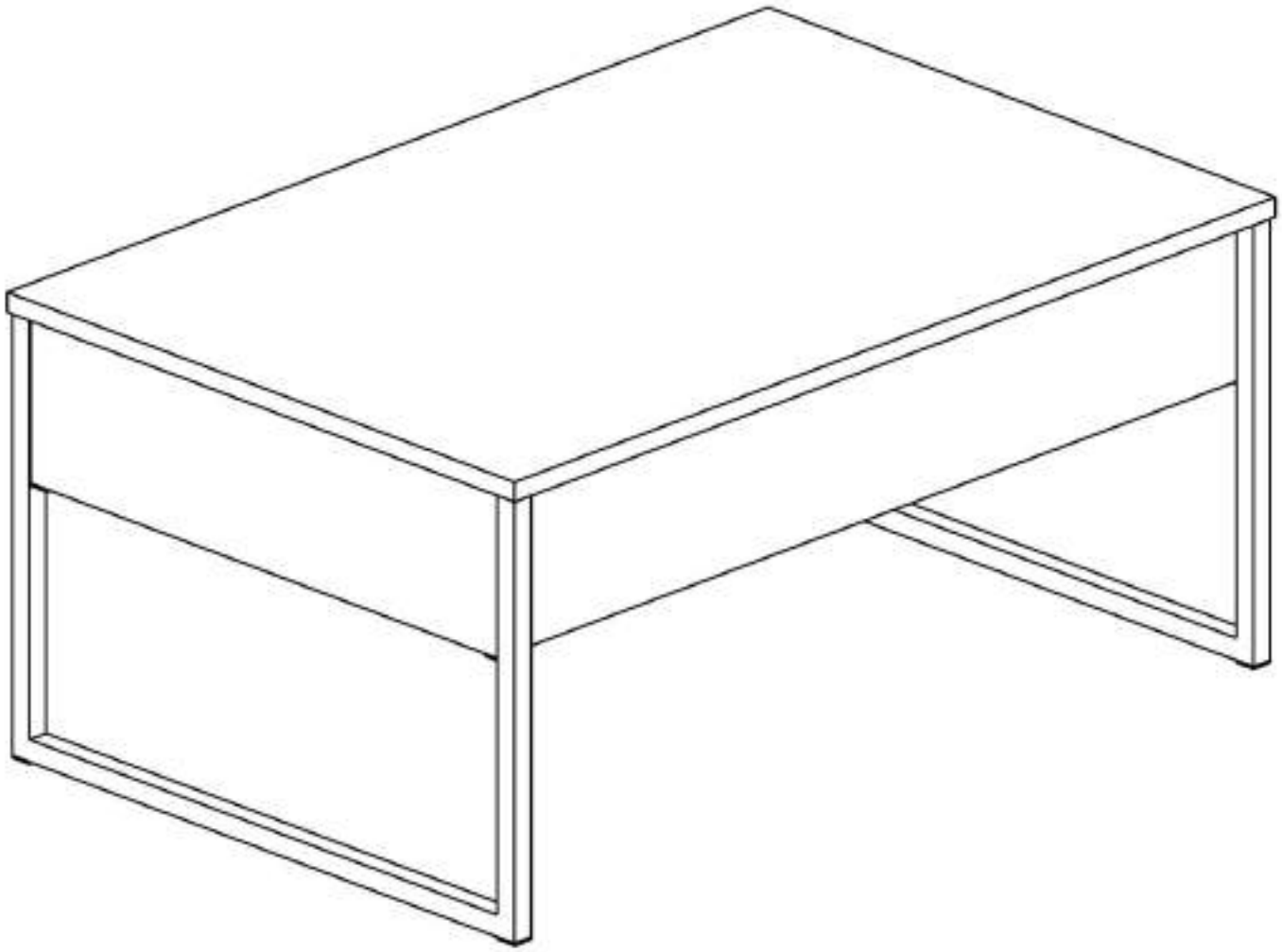

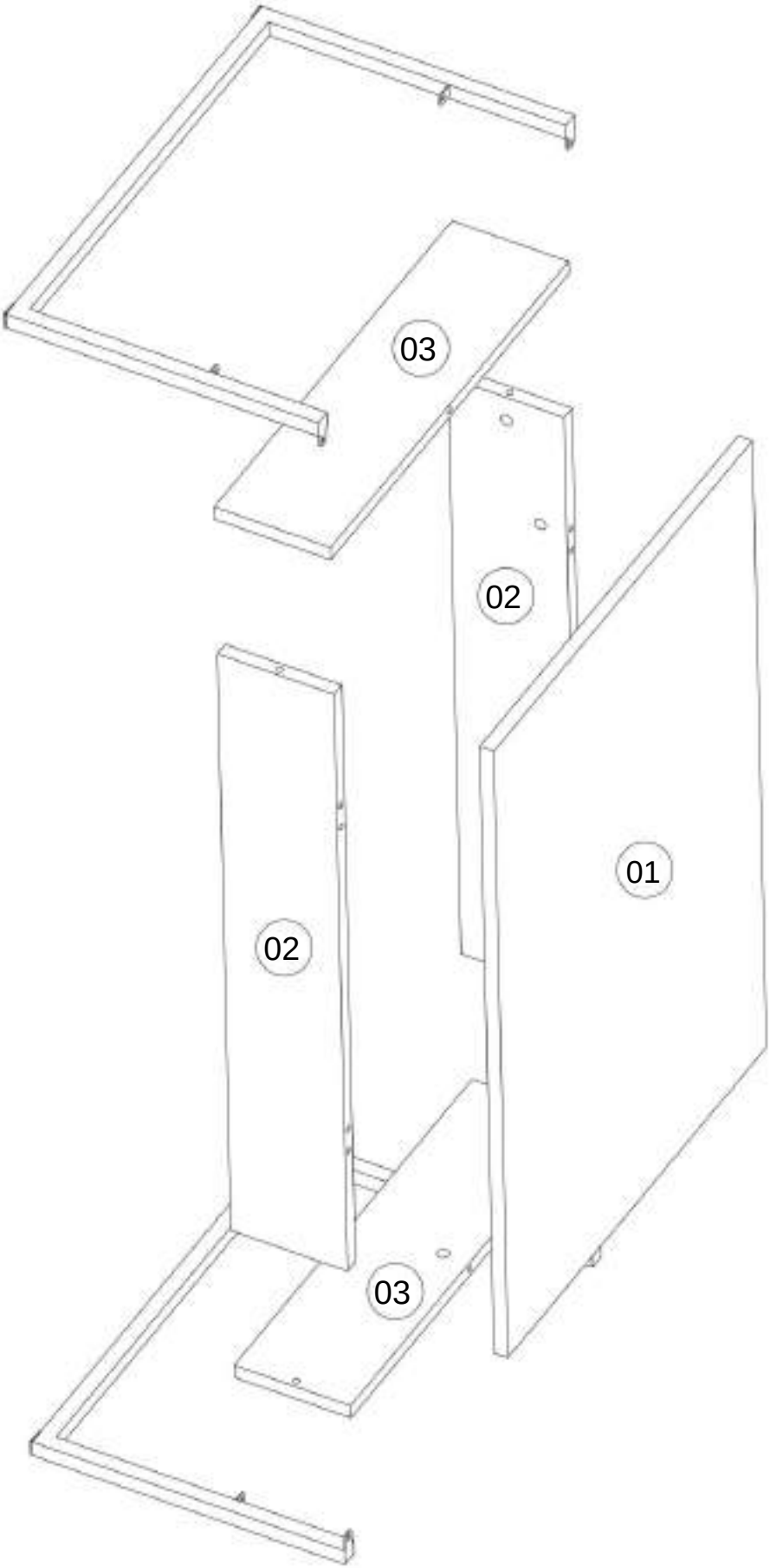



ACCESSORY

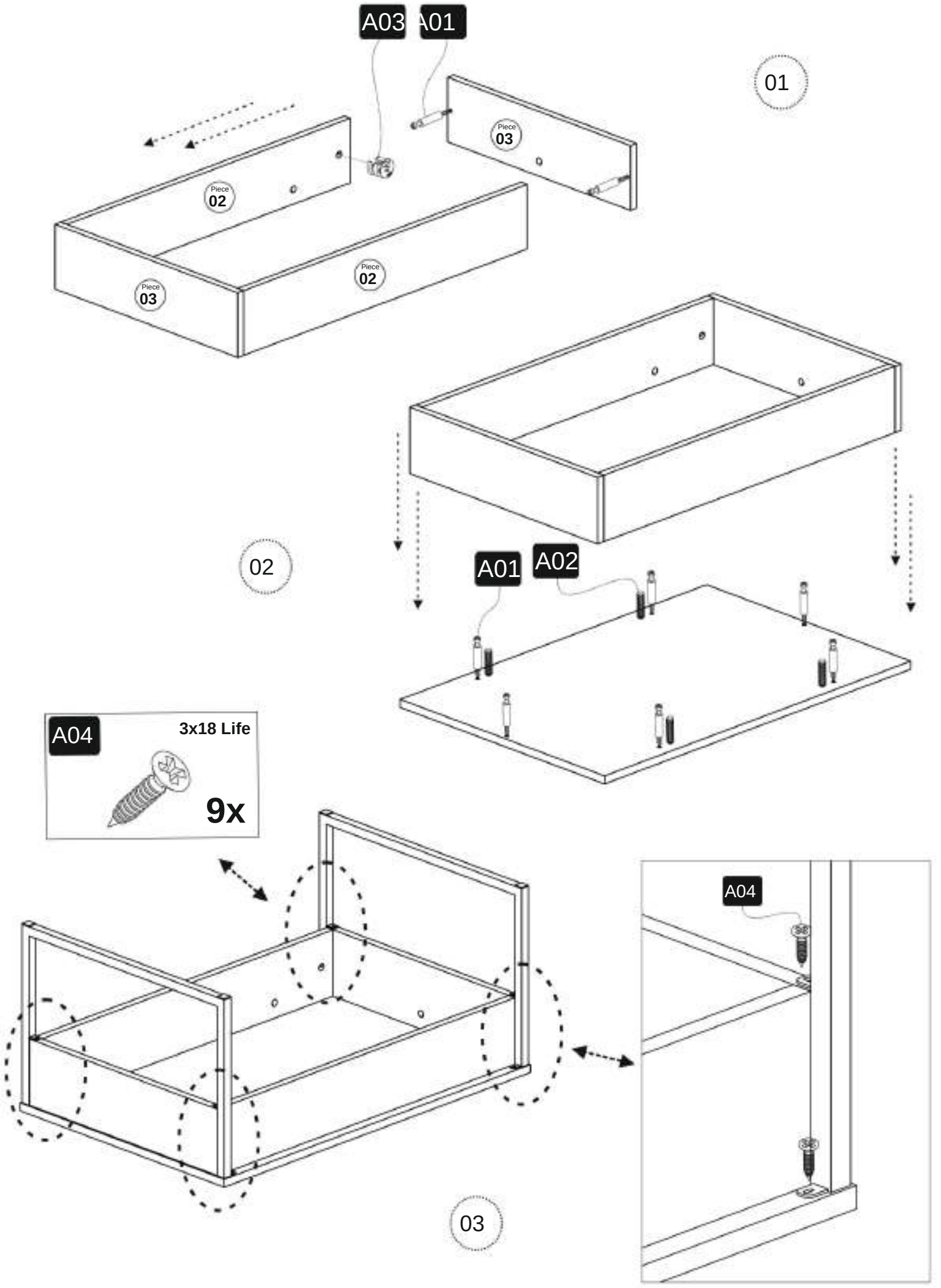
A03
A01
01
Piece 03
Piece 02
Piece 02
Piece 03
02
A01
A02
A04
3x18 Life
9x
A04
03

LUXE TV SEHPASI

MONTAJ VE KULLANIM KILAVUZU

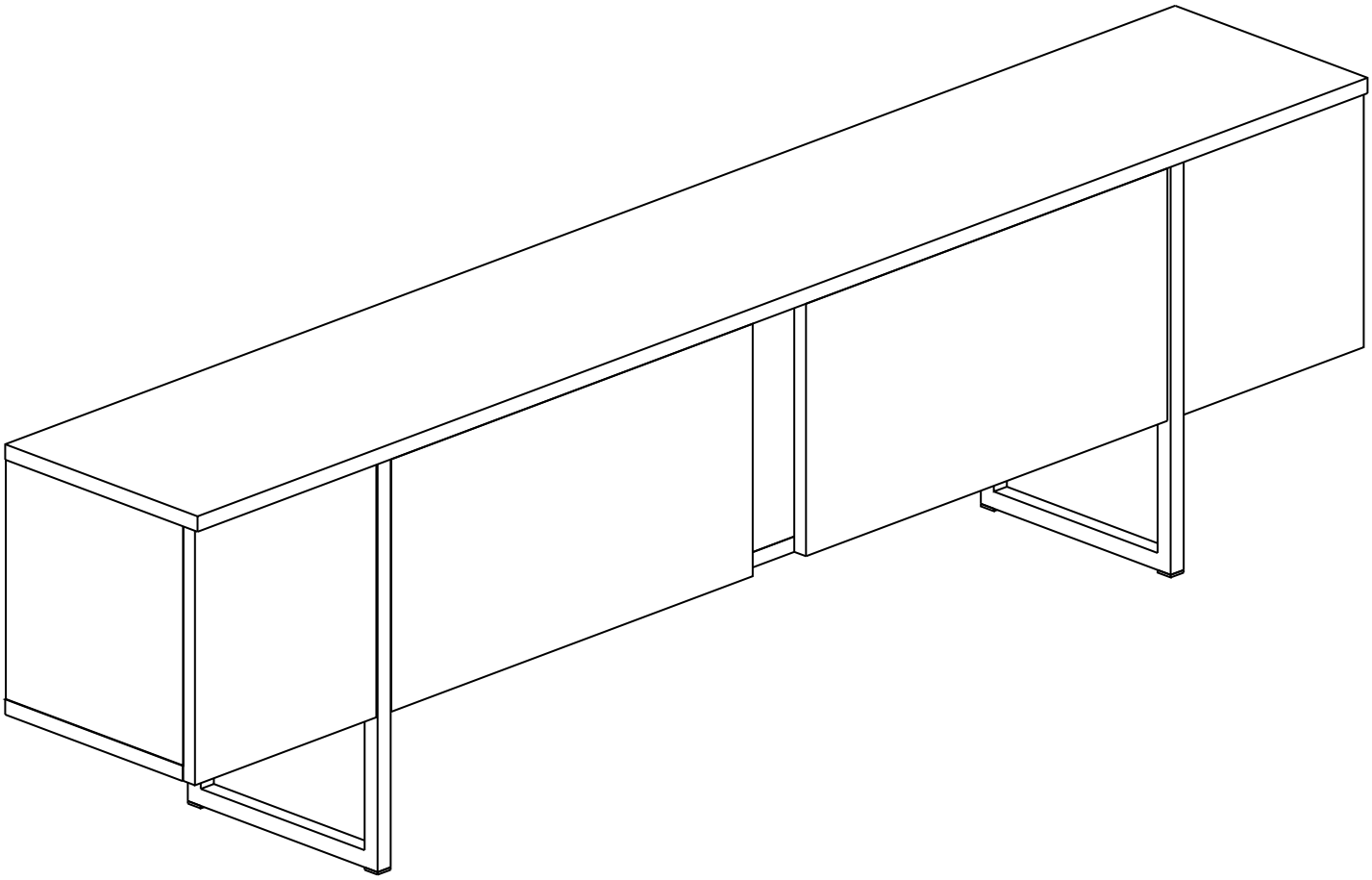

Dear Customer,

All of our products have been checked and tested at every step, from the design process to the production and delivery process, to ensure that you enjoy the products and use them safely for many years.



Before starting the assembly, take all the parts out of the box and check them according to the assembly manual.
If you have purchased more than one product, install the products in order to avoid mixing parts and accessories.



Before starting the assembly, clean each part with a damp cloth.
This cleaning will also be sufficient for general use of the product.



Although the products are carefully checked and packaged, if you encounter a problem during shipping, you can check the necessary parts and contact us.

Any problem that occurs will be fixed free of charge as soon as possible.

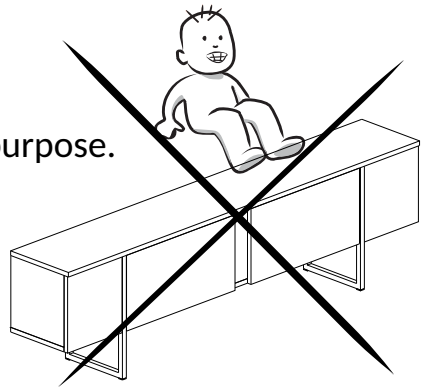

Do not use your furniture for purposes other than its intended purpose.
Please contact us when considering different purposes of use.
Furniture can be damaged when it comes into direct contact with cold, heat or moisture.
Therefore, prevent your furniture from coming into direct contact with these factors.

AKSESUAR LİSTESİ

A01 Minifx Mil 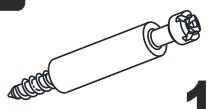 10x	A02 Kavela  11x	A03 Minifix Gövde k18  10x	A04 4x50 Vida 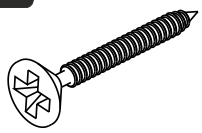 8x
A05 3x18 Vida  23x	A06 Arkalık Çivisi 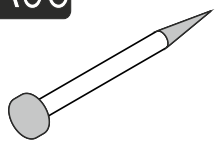 20x	A07 Düz Menteşe  4x	A08 Büyük Tapa  10x

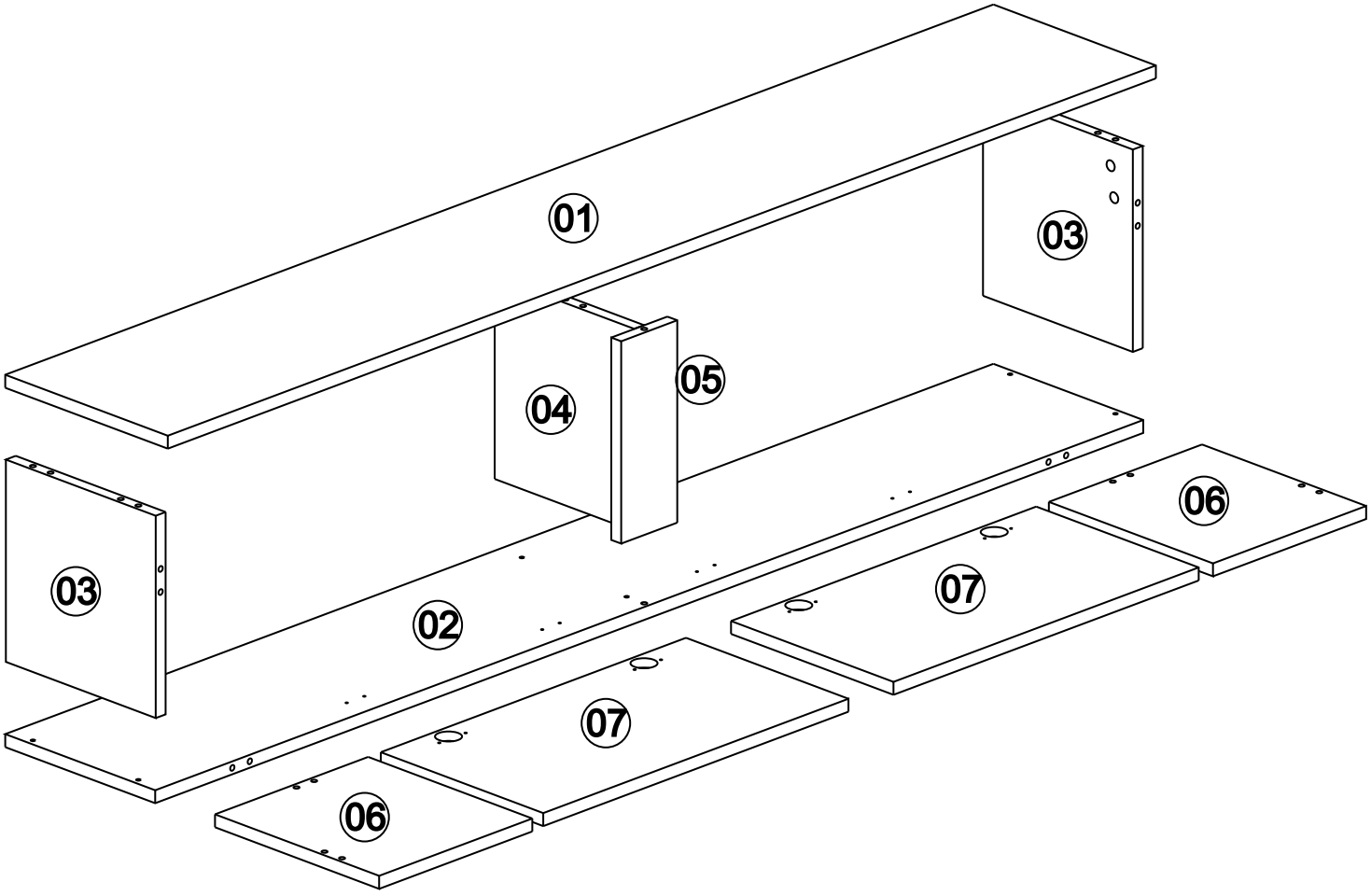

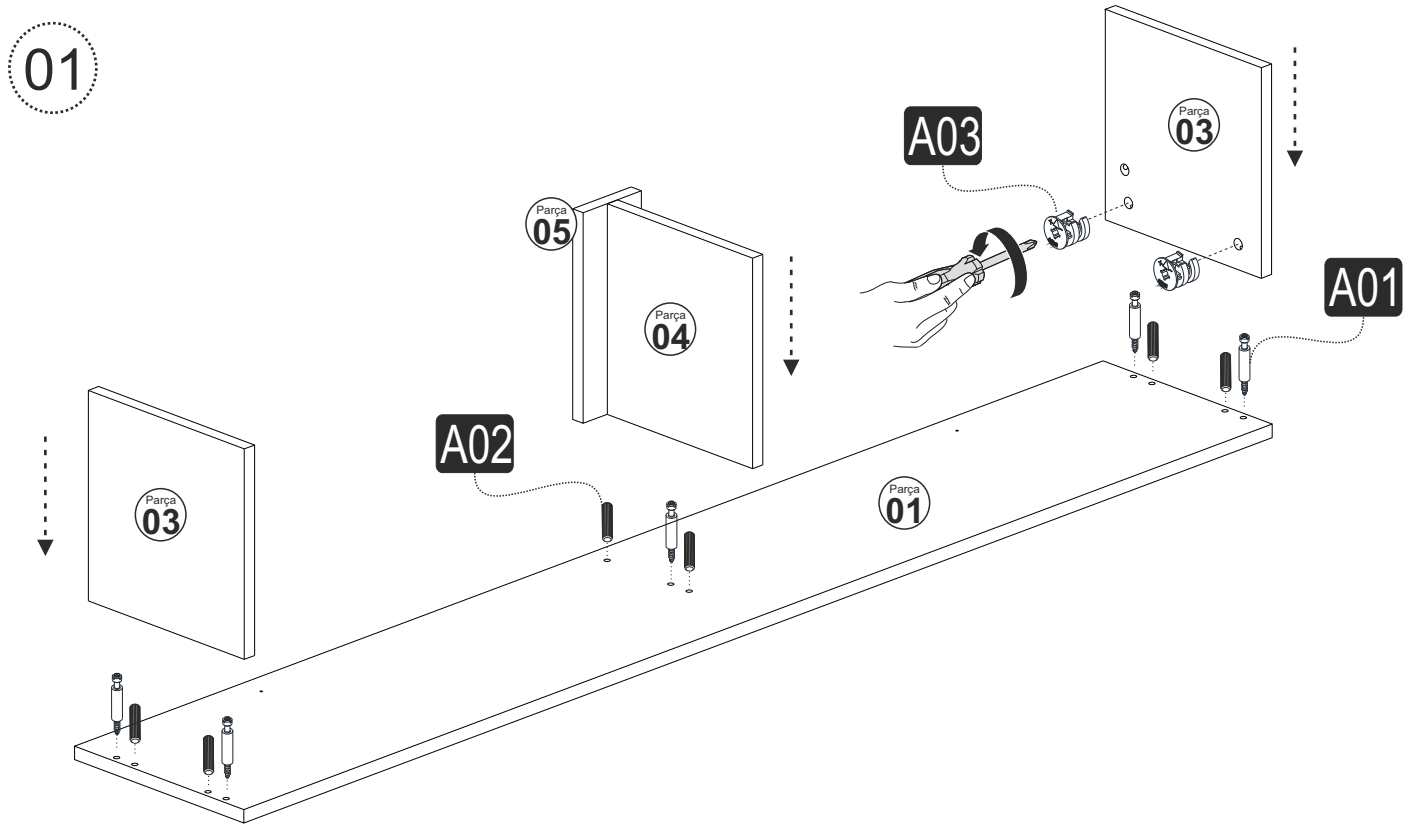
01
A03
Parça 03
Parça 05
Parça 04
A01
A02
Parça 03
Parça 01

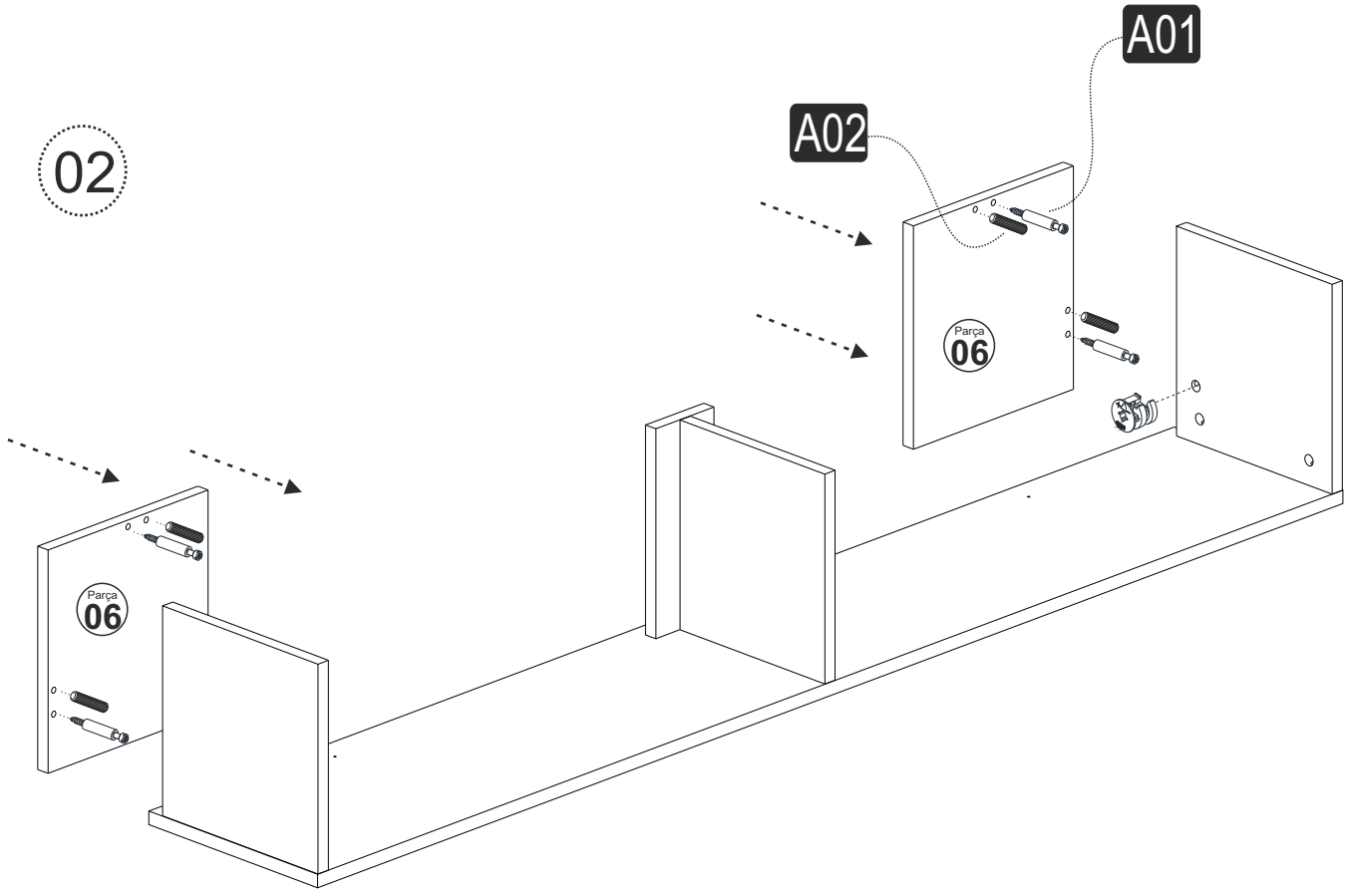
02
A01
A02
Parça 06
Parça 06

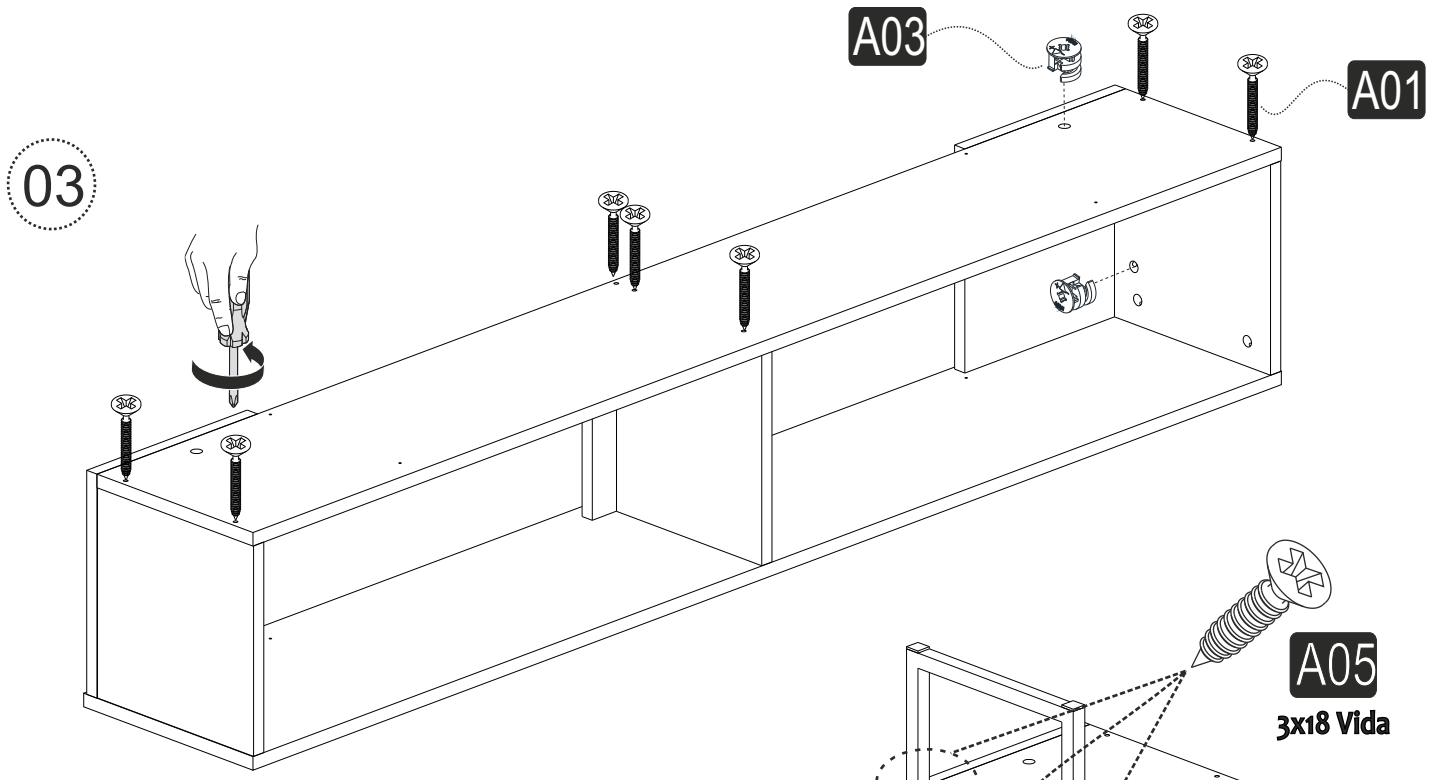

03

04

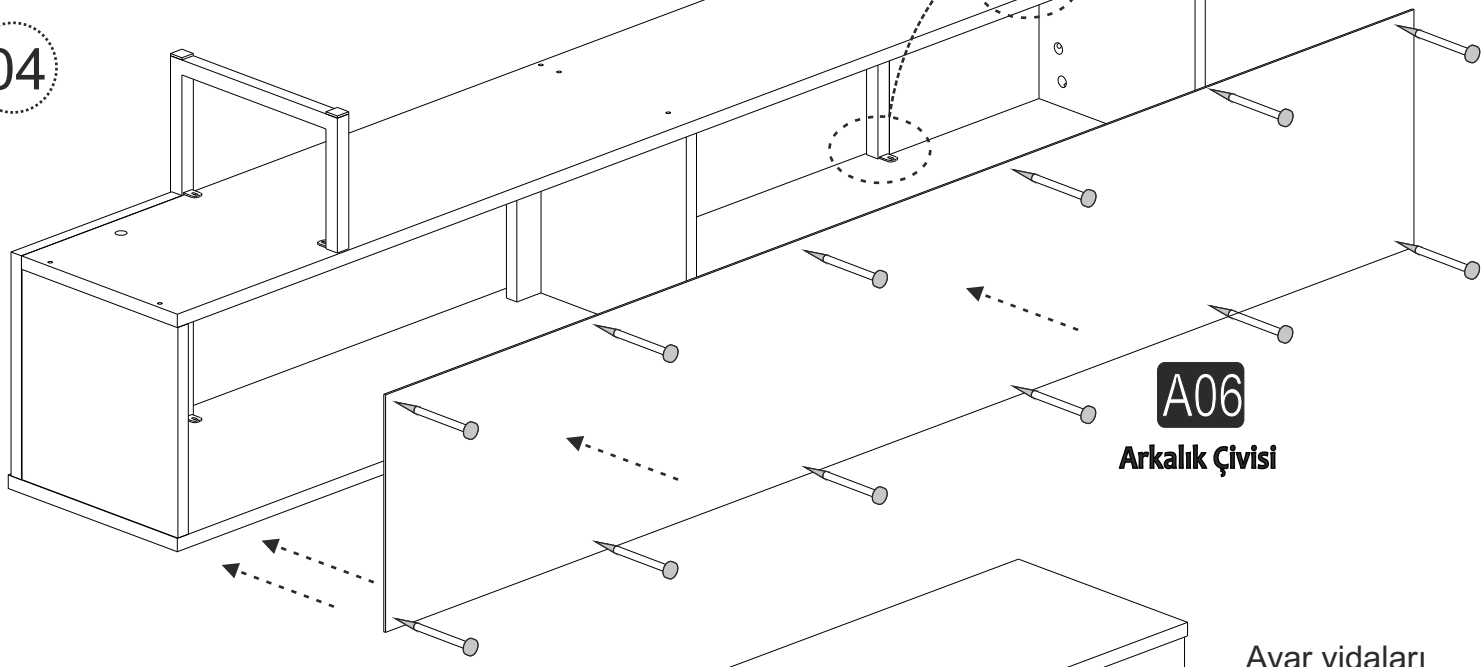

05

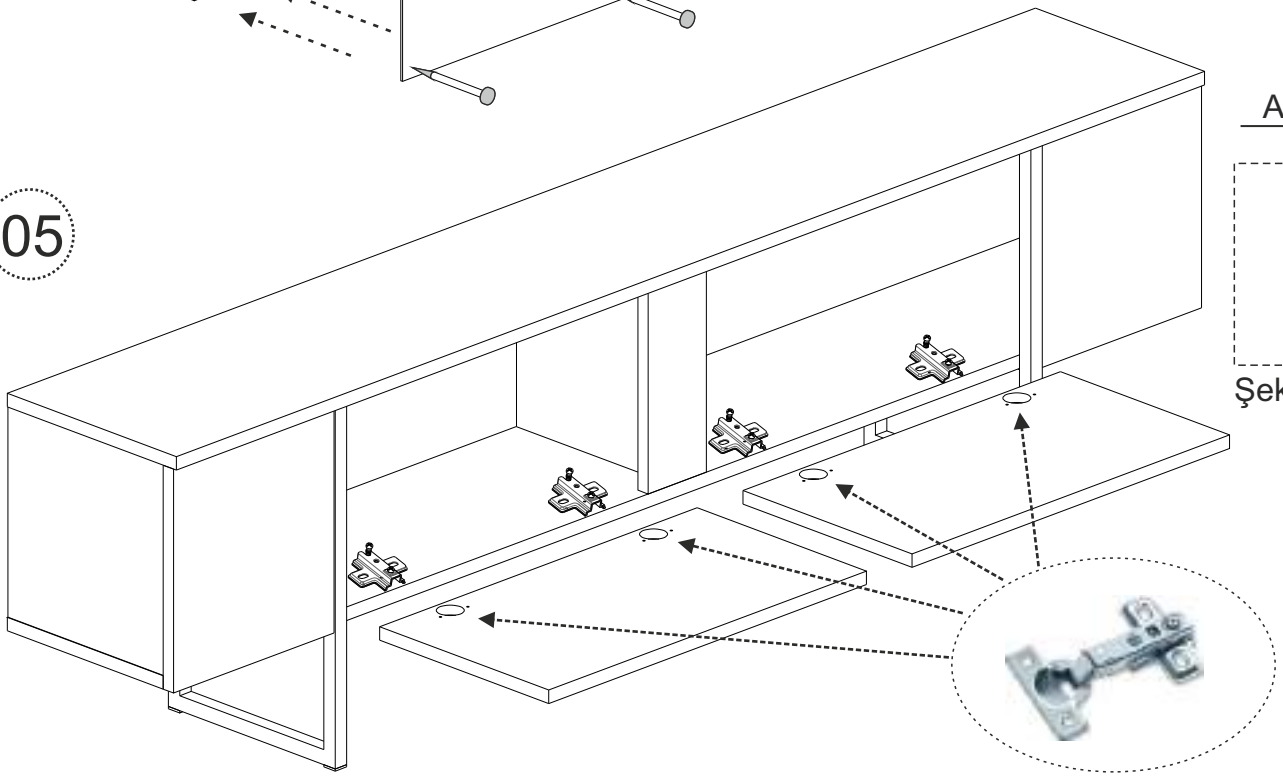

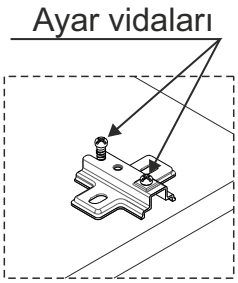

Şekil: a

LUXE CONSOL

INSTALLATION AND USER MANUAL

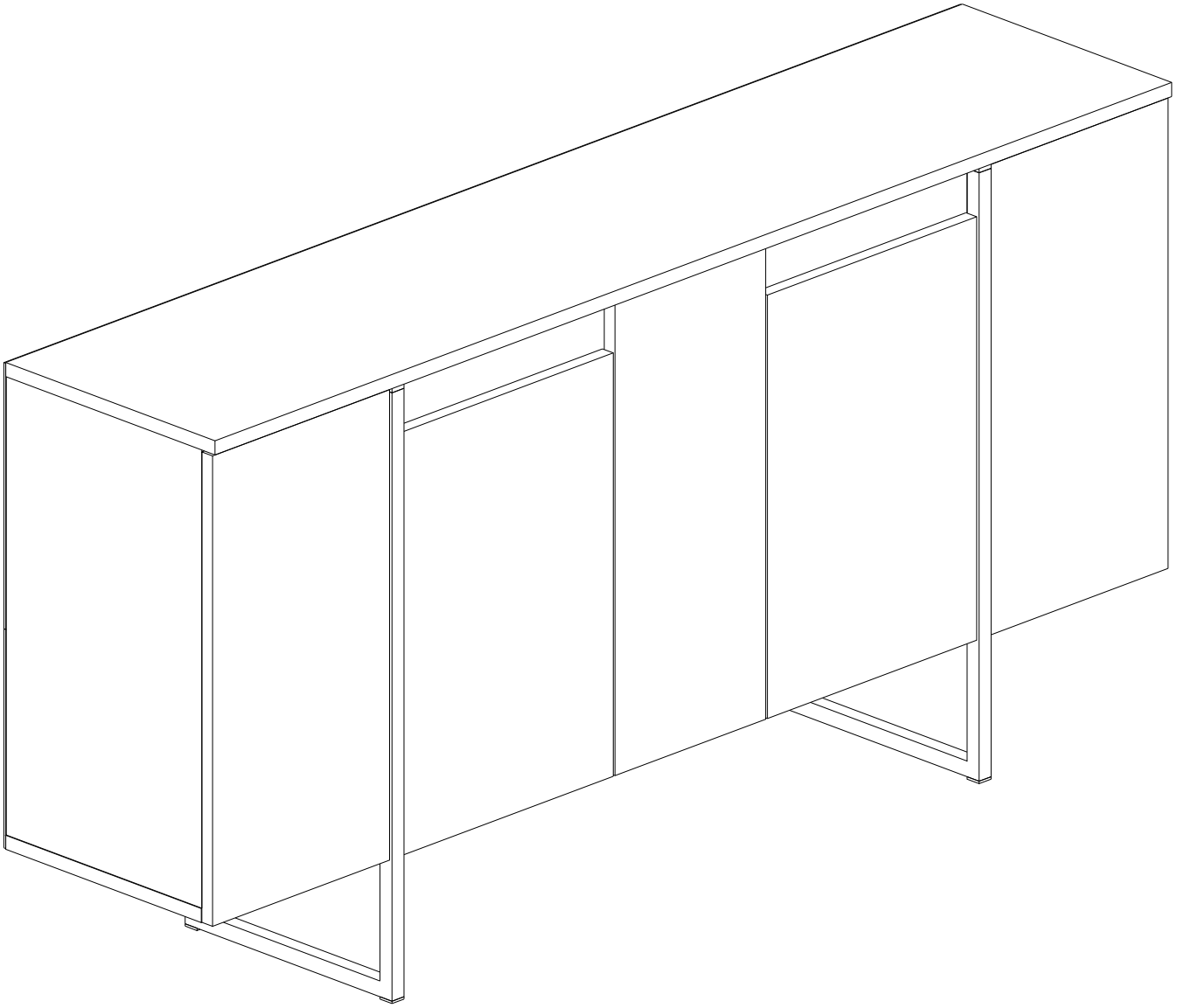

Dear Customer,

All of our products have been checked and tested at every step, from the design process to the production and delivery process, to ensure that you enjoy the products and use them safely for many years.



Before starting the assembly, take all the parts out of the box and check them according to the assembly manual.
If you have purchased more than one product, install the products in order to avoid mixing parts and accessories.



Before starting the assembly, clean each part with a damp cloth.
This cleaning will also be sufficient for general use of the product.



Although the products are carefully checked and packaged, if you encounter a problem during shipping, you can check the necessary parts and contact us.

Any problem that occurs will be fixed free of charge as soon as possible.

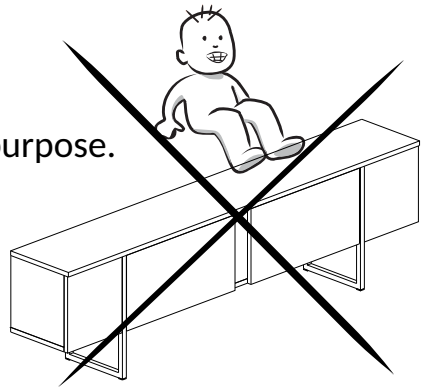

Do not use your furniture for purposes other than its intended purpose.
Please contact us when considering different purposes of use.
Furniture can be damaged when it comes into direct contact with cold, heat or moisture.
Therefore, prevent your furniture from coming into direct contact with these factors.

ACCESSORY LIST

A01 Minifx Mil 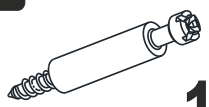 12x	A02 Kavela  12x	A03 Minifix Body k18  12x	A04 4x50 Screw 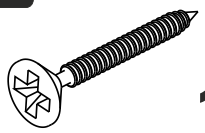 12x
A05 3x18 Screw  34x	A06 Plastic Leg 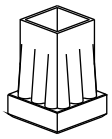 2x	A07 Camel Hinge  8x	A08 Big stopper  10x
A09 Backboard screw 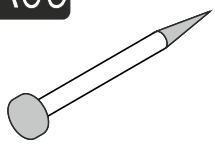 30x	A10 Spiked Foot 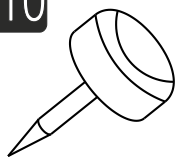 14x		