ASSEMBLY AND USER MANUAL

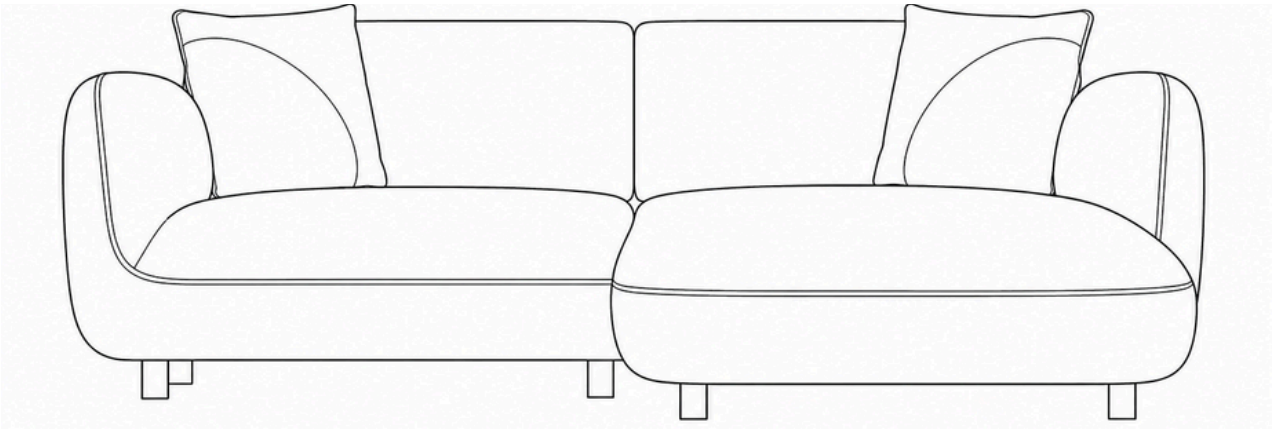

PRODUCT NAME

PAVIA CORNER

PRODUCT SIZE			PACKAGE SIZE
Width	Depth	Height	125 x 90 x 75 / 18 kg (1 Piece)
250x170 cm	90 cm	75 cm	125 x 170 x 75 cm / 25 kg (1 Piece)

Dear Customer,

The product you purchased has been subjected to all kinds of checks and tests before reaching you. Even so, some parts may be damaged during transportation. If this happens, please do not send back the whole product; just request the damaged part. Missing parts will be sent to you as soon as possible.

Before starting the assembly, check all parts and accessories. Start the assembly only after making sure that all parts and accessories are complete and undamaged.

If you have bought more than one product, finish assembling one product before moving on to the next to avoid any mix-up.

Never drag the products. Carry them by lifting, after disassembling, with at least two people. For long-distance transport, always carry the product in its packaging.

Do not wash the fabric of your furniture. The surfaces are very easy to clean; wiping with a damp cloth is enough.

Furniture is affected by excessive heat, cold and humidity; do not expose your furniture directly to these factors.

Do not use your furniture for purposes other than intended.

STEP 1

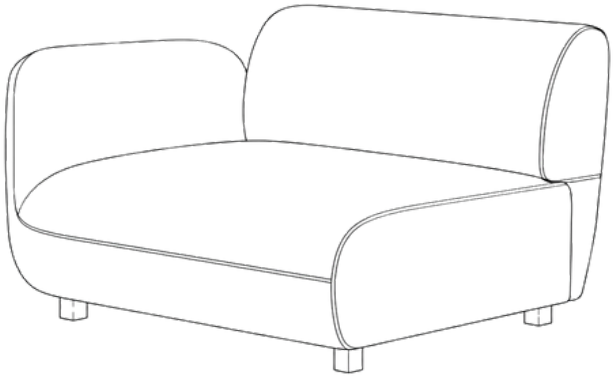

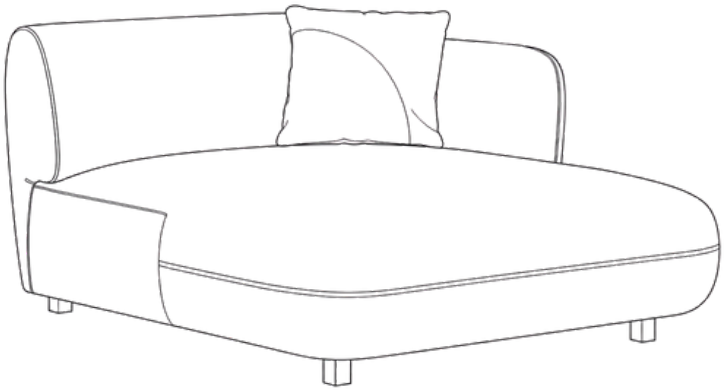

Wooden leg	5x40 chipboard screw	Wooden leg	Support leg	5x40 chipboard screw
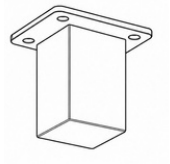		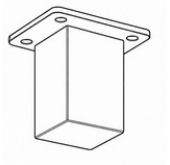	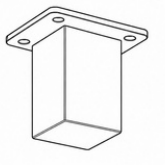	
x4	x16	x4	x1	x20

The Pavia Corner unit consists of 8 wooden legs and 1 support leg.

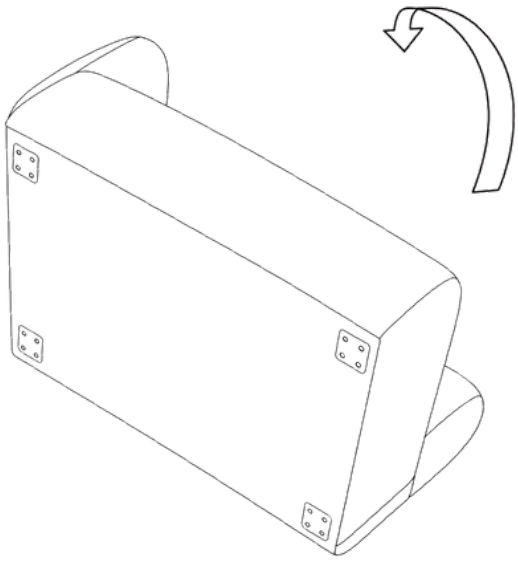

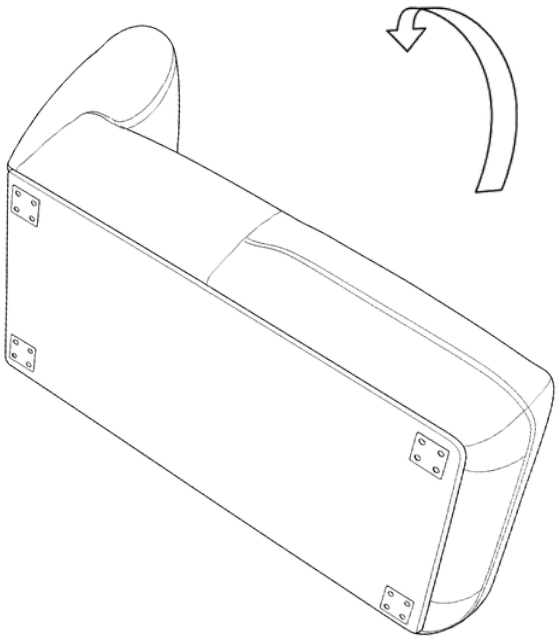

Turn the sofa parts over onto their backs.

STEP 2

The chaise longue module includes 4 wooden legs and 1 support leg.
The seating module includes 4 wooden legs.

Using a drill, fix the screws included in the installation set as shown in the diagram below.

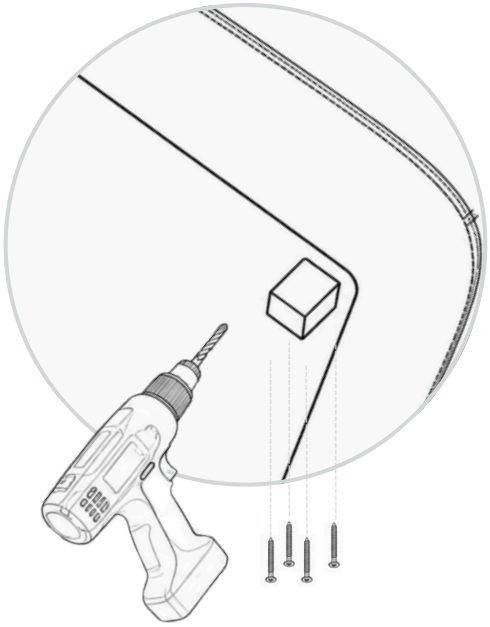



Please do not use a screwdriver for the assembly.

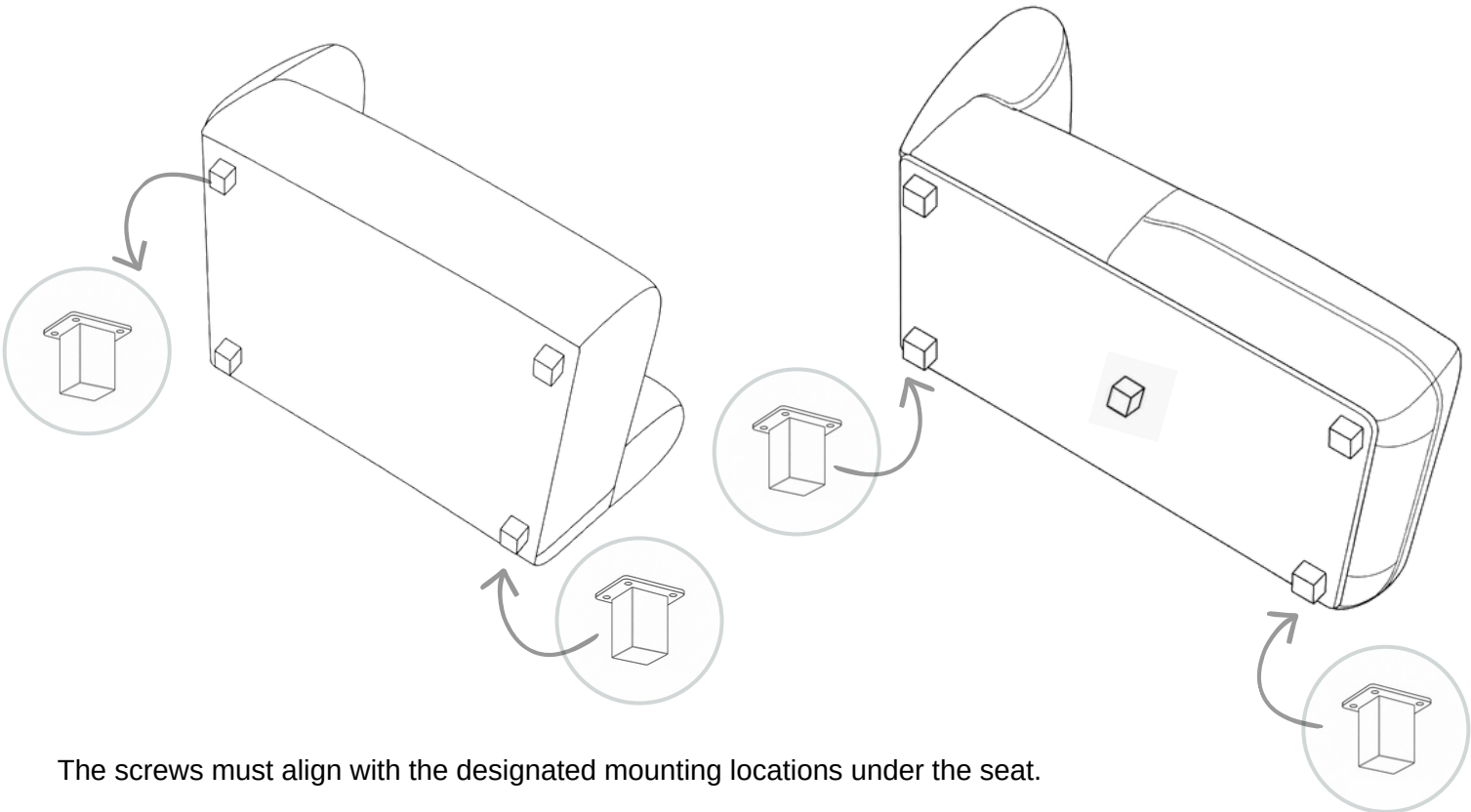

The screws must align with the designated mounting locations under the seat.

STEP 3

After completing the leg assembly, join the sofa parts.

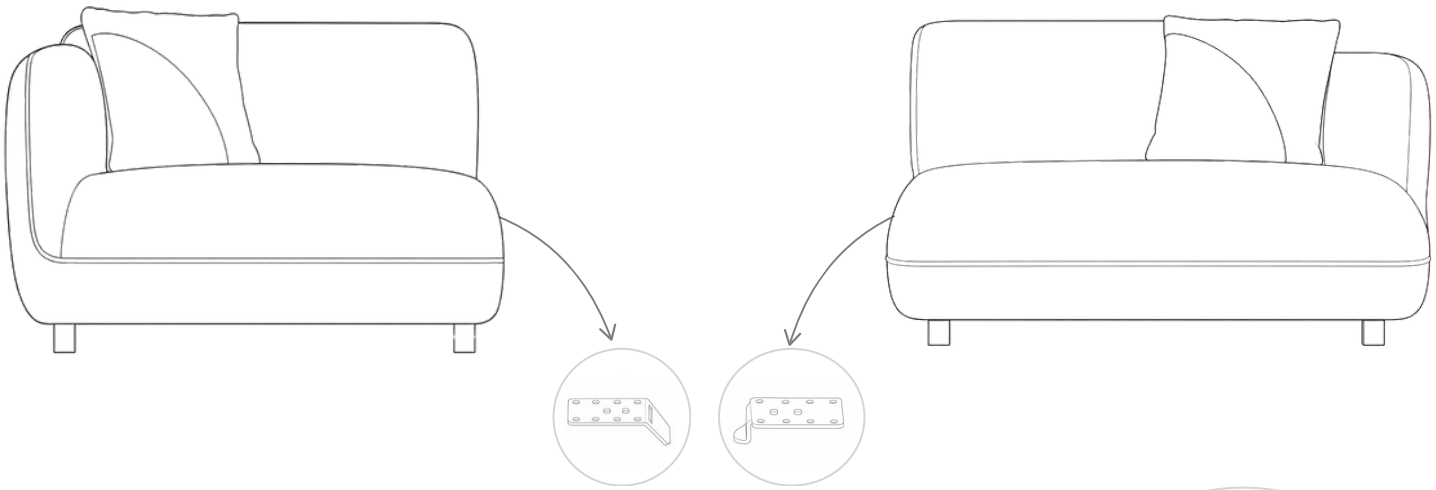

Join the chaise longue module and the seating module with the connecting element as shown in the diagram.

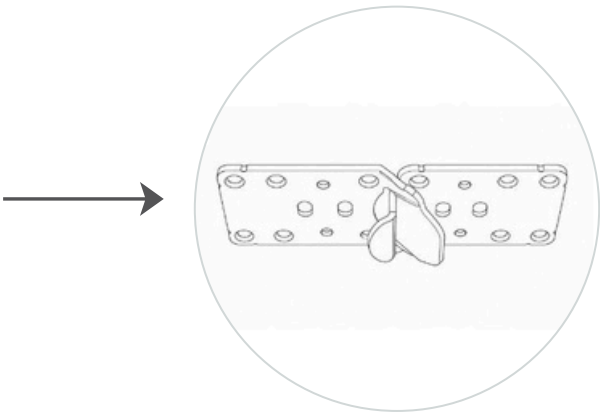

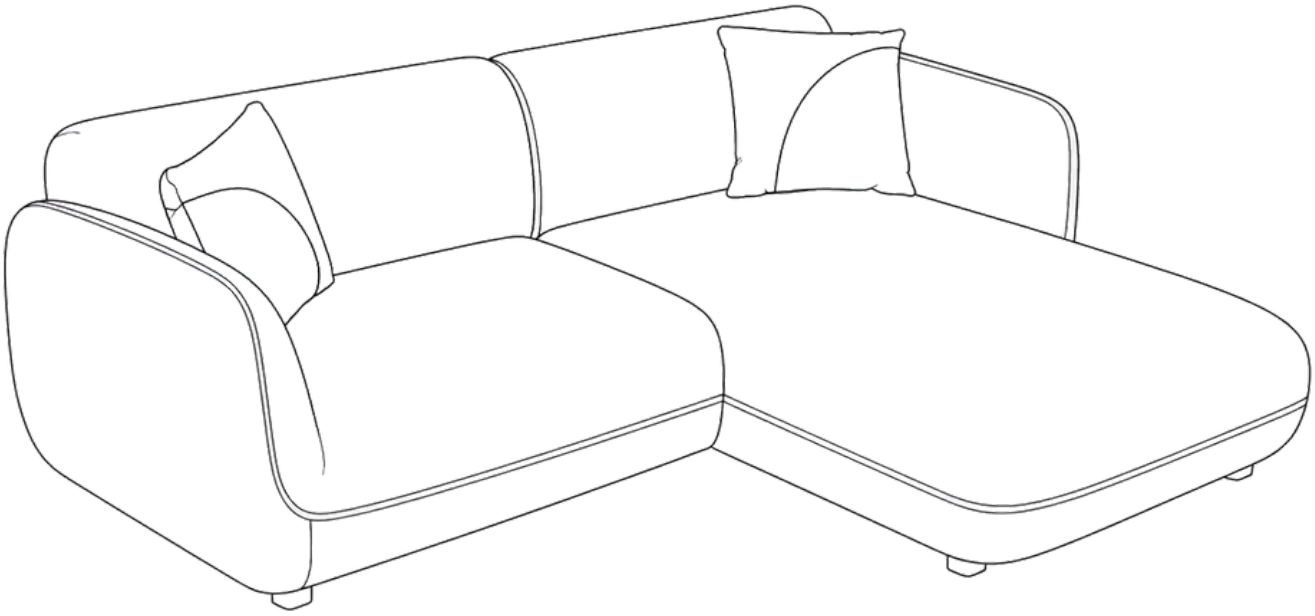

END OF ASSEMBLY