Assembly Manual

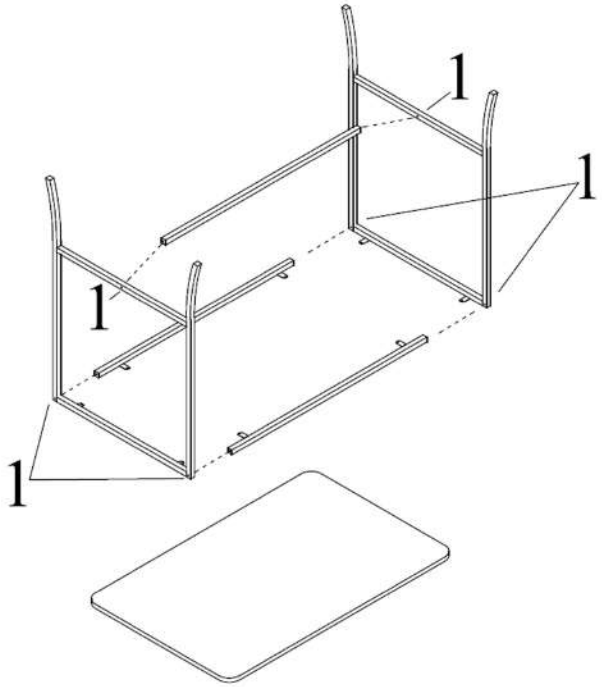

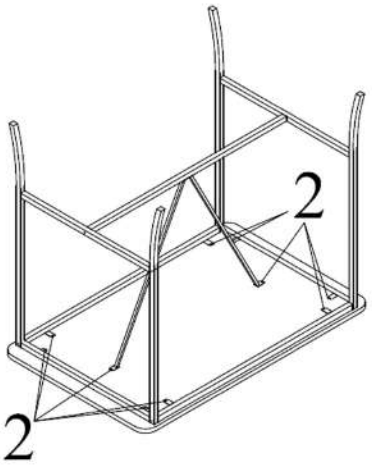

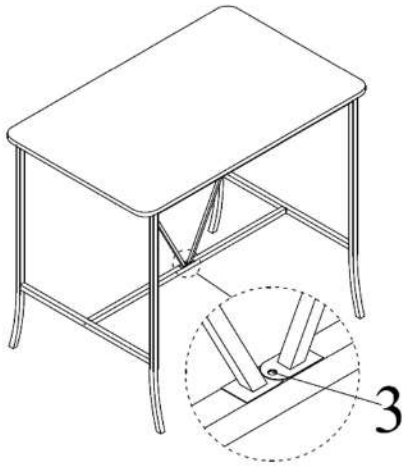

1	M6x35	7	
2	ysb 3.5x18	16	