Assembly Manual



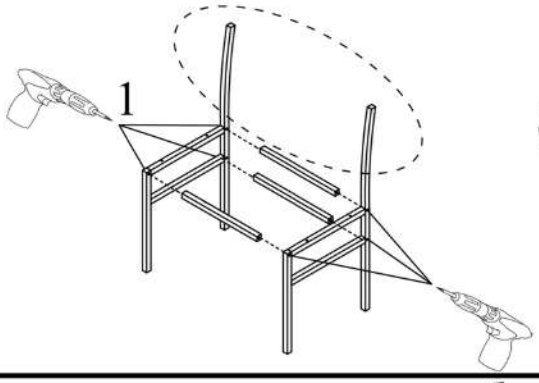

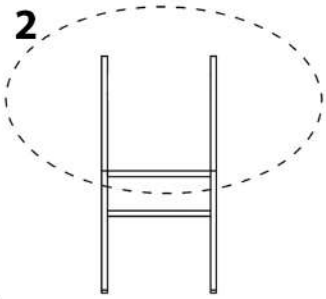

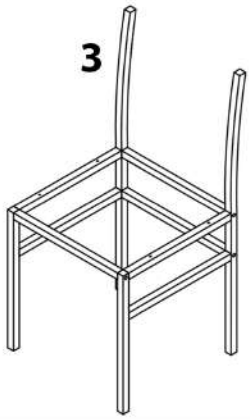

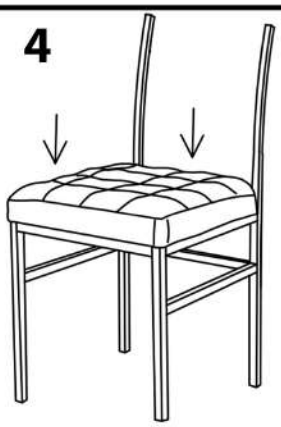

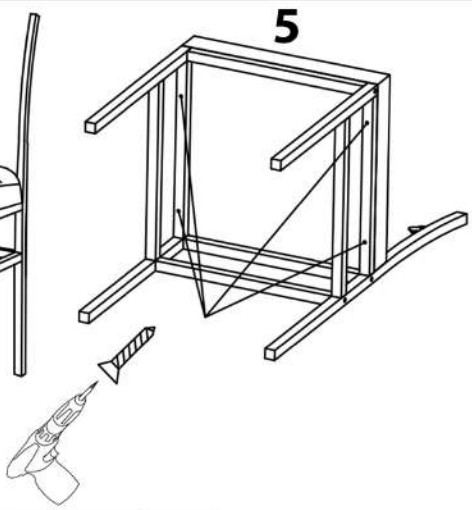



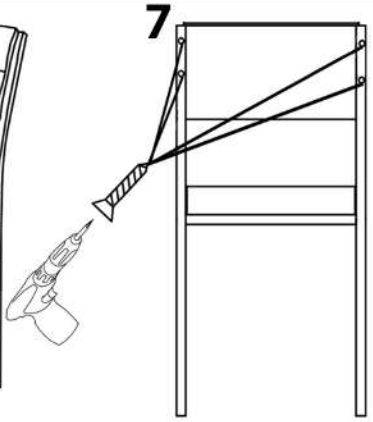

1	M6X35 YSB	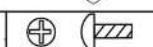	6
2	5*40		8